LOS ANGELES COUNTY PUBLIC WORKS

GUARDRAIL REPLACEMENT
VARIOUS LOCATIONS RD336
OFF-SYSTEM (EM2501)

INDEX TO PROJECT PLANS

SHEET NUMBER	DESCRIPTION
1	TITLE SHEET
2-10	PLAN A - PIUMA RD
11-20	PLAN B - LAS FLORES CANYON RD
21-26	PLAN C - RAMBLA PACIFICO ST AND BRIARBLUFF ST
27-29	PLAN D - HUME RD
30-33	PLAN E - CASTLEWOOD DR
34-37	PLAN F - SCHUEREN RD AND SADDLE PEAK RD
38-42	PLAN G - SADDLE PEAK RD AND TUNA CANYON RD
PLAN TC	TRAFFIC CONTROL PLANS

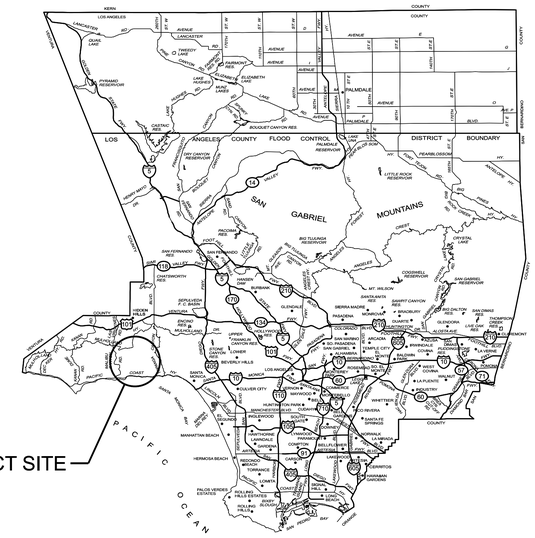

LOCATION MAP
NOT TO SCALE

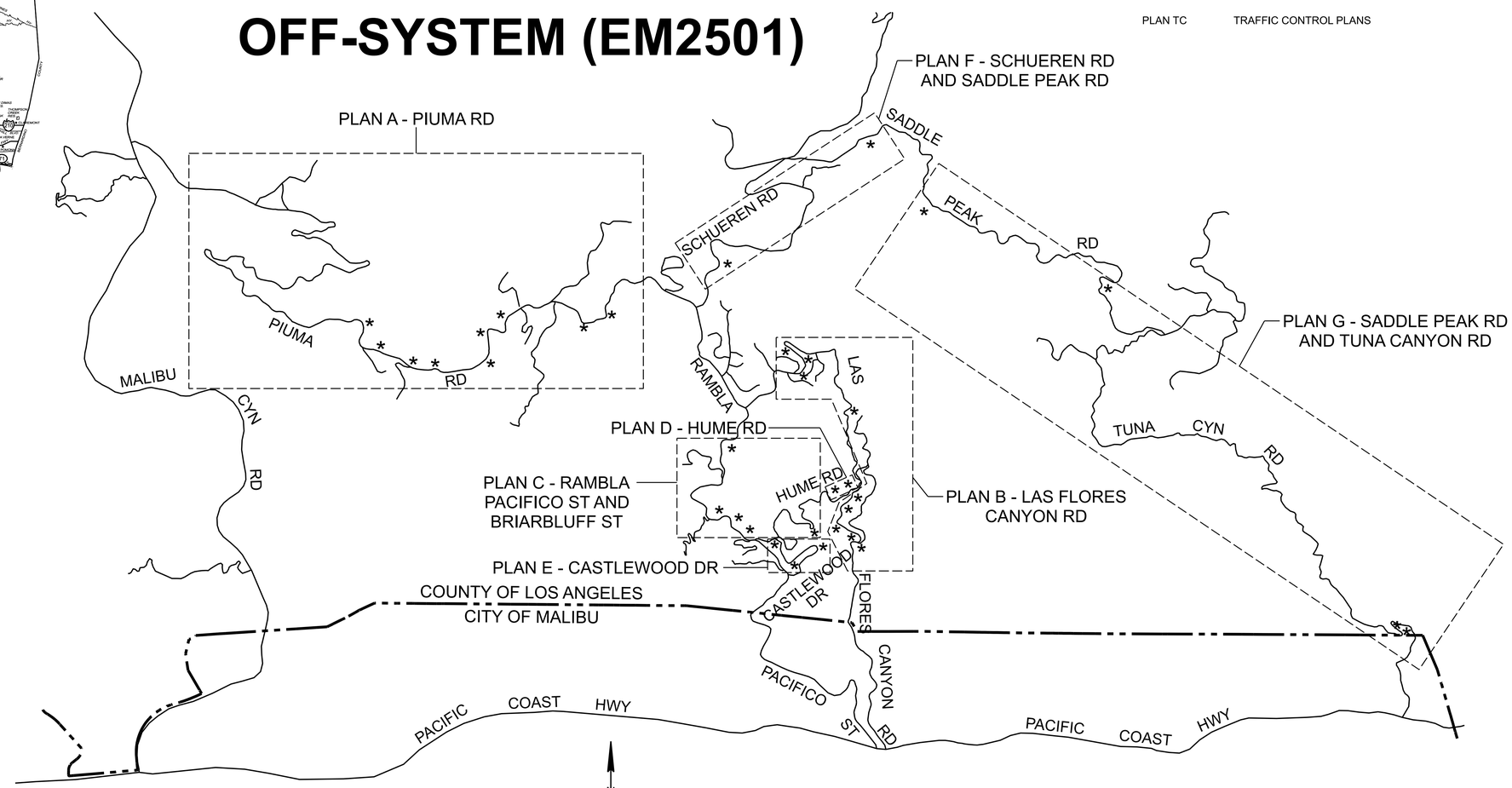

KEY MAP
NOT TO SCALE

1 PRIME CONTRACTOR LICENSE REQUIRED: CLASS A OR C13

DATE	MARK	DESCRIPTION
10/8/2025	1	ADDED REQUIRED CONTRACTOR LICENSE

REVISIONS

Know what's below. Call before you dig.

APPROVED BY MARK PESTRELLA, DIRECTOR OF PUBLIC WORKS

ASSISTANT DEPUTY DIRECTOR — DATE 08/11/2025

RECOMMENDED BY:

DESIGN DIVISION — DATE 8-11-25

REGISTERED PROFESSIONAL ENGINEER — BRIAN FUNG — C 76772 — CIVIL — STATE OF CALIFORNIA

PROJECT ENGINEER — DATE 8/6/25

LOS ANGELES COUNTY PUBLIC WORKS

GUARDRAIL REPLACEMENT
VARIOUS LOCATIONS RD336 OFF-SYSTEM (EM2501)

PROJECT ID NO. RDC0016661
TITLE SHEET

DWG PH086888

DRAFTER M. PATEL
DESIGNER B. FUNG
CADD PROJECT FILE NAME RDC0016661 - GUARDRAIL REPLACEMENT.dgn

LOS ANGELES COUNTY PUBLIC WORKS

GUARDRAIL REPLACEMENT
VARIOUS LOCATIONS RD336
OFF-SYSTEM (EM2501)

INDEX TO PROJECT PLANS

SHEET NUMBER	DESCRIPTION
1	TITLE SHEET
2	NOTES, REFERENCES, TYPICAL SECTIONS
3-9	PLAN

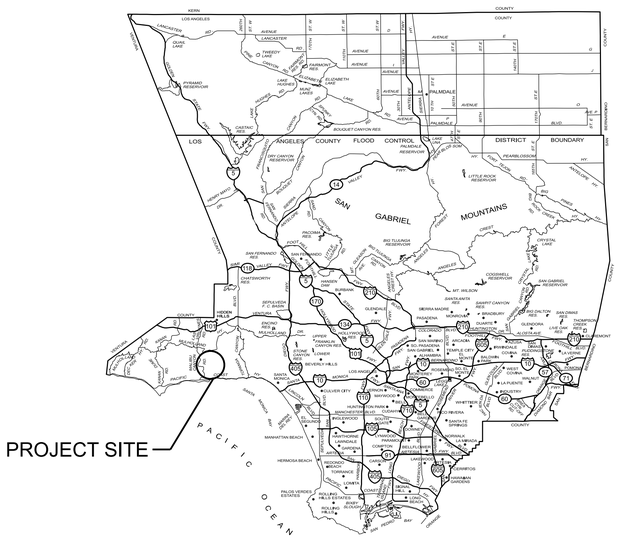

LOCATION MAP
NOT TO SCALE

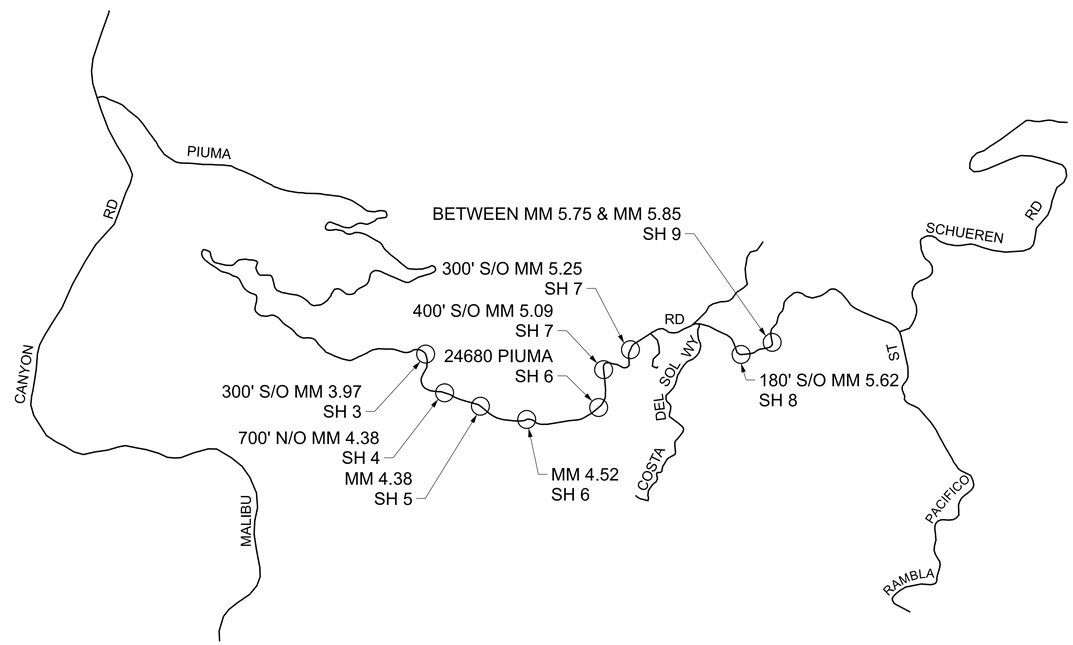

N

KEY MAP
NOT TO SCALE

CADD PROJECT FILE NAME: DES0003842 - 2025 PALISADES FIRE GUARDRAIL REPAIR.dgn
CHECKER: A. NGUYEN
DESIGNER: J. DU
DRAFTER: C. RAUDA / J. YE

DATE	MARK	DESCRIPTION

REVISIONS

REGISTERED PROFESSIONAL ENGINEER JEFFERSON DU C 86537 CIVIL STATE OF CALIFORNIA
03/20/25
PROJECT ENGINEER DATE

LOS ANGELES COUNTY PUBLIC WORKS
GUARDRAIL REPLACEMENT
VARIOUS LOCATIONS RD336 OFF-SYSTEM (EM2501)
PIUMA ROAD
PROJECT ID NO. RDC0016661
TITLE SHEET

DWG PH086888 | SHEET 1 OF 9

PLAN A

DATE: 4/8/2025 TIME: 1:56:42 PM FILE: pw://pwedmsprod01.dpw.co.la.ca.us:PW_INT2/Documents/DEPARTMENT PROJECTS (PIW)/DES/DES0003842 - 2025 Palisades File - Guardrail Repair/DES Guardrail/TD2/COMBINED PLANS/4-CAD/DES0003842 - 2025 PALISADES FIRE GUARDRAIL REPAIR.dgn

CONSTRUCTION LEGEND

1. REMOVE & DISPOSE OF EXISTING GUARDRAIL (INCLUDING POSTS)
2. IN-LINE TERMINAL SYSTEM (TYPE MSKT-TL2)
4. MIDWEST GUARDRAIL SYSTEM (STEEL POST W/ PLASTIC BLOCK)
5. MIDWEST GUARDRAIL SYSTEM (STEEL POST W/ PLASTIC BLOCK) (8' POST)
6. MIDWEST GUARDRAIL SYSTEM TRANSITION TO METAL BEAM GUARDRAIL
7. STRENGTHENED MIDWEST GUARDRAIL SYSTEM (CALTRANS STD PLAN A77R4)
13. DELINEATOR PER CALTRANS STD PLAN A77N4
14. AC PAVEMENT
16. HMA DIKE (TYPE PER PLAN)

STANDARD PLANS

STATE OF CALIFORNIA DEPARTMENT OF TRANSPORTATION
STANDARD PLANS (2024 EDITION)

A77L2	MIDWEST GUARDRAIL SYSTEM STANDARD RAILING SECTION
A77L4	MIDWEST GUARDRAIL SYSTEM TRANSITION TO METAL BEAM GUARDRAIL
A77N3	MIDWEST GUARDRAIL SYSTEM TYPICAL LINE POST EMBEDMENT AND HINGE POINT OFFSET DETAILS
A77N4	MIDWEST GUARDRAIL SYSTEM TYPICAL RAILING DELINEATION AND DIKE POSITIONING DETAILS
A77N5	MINOR CONRETE VEGETATION CONTROL GUARDRAIL SYSTEM
A77P2	MIDWEST GUARDRAIL SYSTEM TYPICAL LAYOUTS FOR EMBANKMENTS
A77R1	MIDWEST GUARDRAIL SYSTEM TYPICAL LAYOUTS FOR FIXED OBJECTS BETWEEN SEPARATE ROADBEDS
A77S1	MIDWEST GUARDRAIL SYSTEM END ANCHOR ASSEMBLY (TYPE SFT-M)
A87B	HOT MIX ASPHALT DIKES
1 A77N5A	MINOR CONCRETE VEGETATION CONTROL GUARDRAIL SYSTEM NARROW VEGETATION CONTROL INSTALLATION
A77N6	MINOR CONCRETE VEGETATION CONTROL GUARDRAIL SYSTEM FOR TERMINAL SYSTEM END TREATMENTS
A77N7	MINOR CONCRETE VEGETATION CONTROL GUARDRAIL SYSTEM AT STRUCTURE APPROACH
A77N8	MINOR CONCRETE VEGETATION CONTROL GUARDRAIL SYSTEM AT FIXED OBJECT
A77N9	MINOR CONCRETE VEGETATION CONTROL GUARDRAIL SYSTEM AT FIXED OBJECT
A77N10	MINOR CONCRETE VEGETATION CONTROL GUARDRAIL SYSTEM AT FIXED OBJECT
A77N11	MINOR CONCRETE VEGETATION CONTROL GUARDRAIL SYSTEM MISCELLANEOUS DETAILS

GUARDRAIL NOTES

1. ALL STD GUARDRAIL INSTALLATION SHALL BE STEEL POSTS WITH NOTCHED PLASTIC BLOCKS.
2. ALL GUARDRAIL LENGTH AND LOCATION ARE MEASURED ALONG THE FACE OF THE RAILING, UNLESS OTHERWISE SHOWN ON THE PLANS AND DETAILS OR AS DIRECTED BY THE ENGINEER.
3. EACH TERMINAL SYSTEM INSTALLED MUST BE IDENTIFIED BY PAINTING THE TYPE OF THE TERMINAL SYSTEM IN NEAT BLACK LETTERS AND FIGURES 2 INCHES HIGH ON THE BACKSIDE OF THE RAIL ELEMENT BETWEEN SYSTEM POST NUMBERS 4 AND 5.
4. FOR INSTALLATION OF TERMINAL SYSTEMS, BLACK AND YELLOW RETROREFLECTIVE STRIPED SHEETING SHALL BE ADHERED TO THE APPROACH END (S) OF THE GUARDRAIL. THE STRIPES SHALL BE SLOPED DOWN AT AN ANGLE OF 45 DEGREES TOWARDS THE SIDE OF THE ROADWAY ON WHICH TRAFFIC IS TO PASS THE OBSTRUCTION BEING PROTECTED. THE SHEETING SHALL BE CONSISTENT WITH THE DESIGN PATTERN, COLORS, AND DIRECTION OF A TYPE "P(CA)" OBJECT MARKER PER CALIFORNIA MANUAL OF UNIFORM TRAFFIC CONTROL DEVICES (MUTCD) 2014 EDITION, SECTION 2C.65.
5. THE PROPOSED TERMINAL SYSTEM SHALL BE INSTALLED IN A STRAIGHT FLARE OVER THE ENTIRE LENGTH AND SHOULD NOT BE INSTALLED ON A PARABOLIC CURVE.
6. IN-LINE TERMINAL SYSTEMS MUST USE STEEL POSTS AND PLASTIC BLOCKS, AND INSTALLED PER MANUFACTURER'S RECOMMENDATIONS.
7. DELINEATORS MUST BE PLACED 25 FEET FROM THE END OF THE END TREATMENT AND SPACED AT 25-FOOT INTERVALS THEREAFTER.
8. (1) CONSTRUCT MINOR CONCRETE VEGETATION CONTROL AT ALL LOCATIONS PER CALTRANS STANDARD PLANS A77N5 THROUGH A77N11 EXCEPT WHERE MINOR CONCRETE & BLOCK-OUT MATERIAL ARE ALREADY SHOWN ON PLAN.

NON-STANDARD ABBREVIATIONS

(NOT INCLUDED IN SPPWC OR SSPWC)

EP	EDGE OF PAVEMENT
ETW	EDGE OF TRAVELED WAY
GR	GRADE
INV	INVERTED
PP	POWER POLE
RD	ROAD
TRANS	TRANSITION

AC PAVEMENT CLASS AND GRADE LEGEND

P1 C2-PG 64-10 B-PG 64-10	P3 B-PG 64-10
P2 C2-PG 64-10	P4 D2-PG 64-10

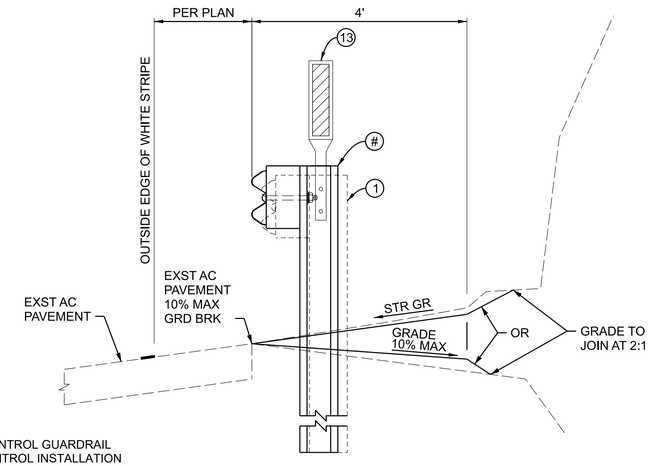

SECTION A
NOT TO SCALE

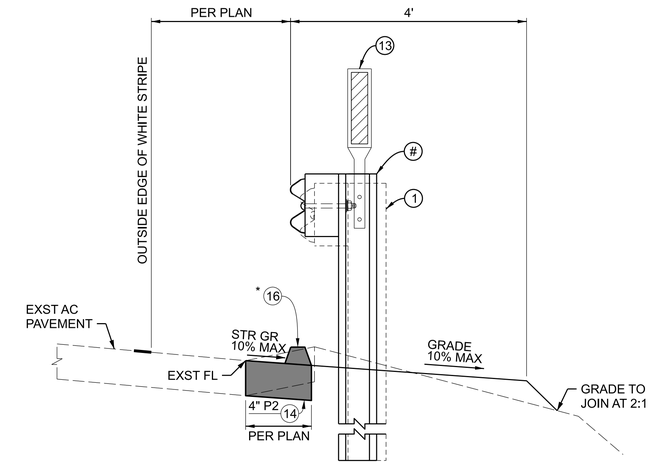

SECTION C
NOT TO SCALE

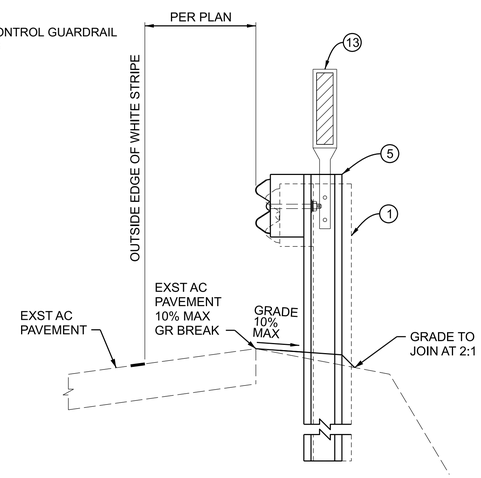

SECTION B
NOT TO SCALE

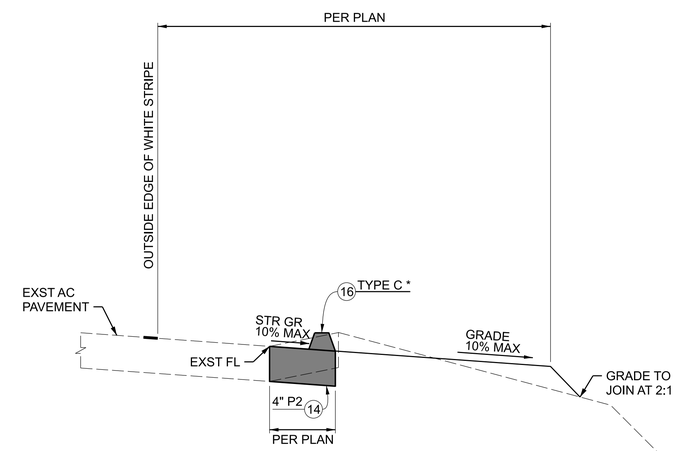

SECTION D
NOT TO SCALE

INDICATES DIRECTION OF TRAFFIC

NOTE:

(#) : PER PLAN
* : LOCATION AND TYPE PER PLAN

DATE	MARK	DESCRIPTION
11/3/2025	1	ADDED MINOR CONCRETE VEGETATION CONTROL

REVISIONS

REGISTERED PROFESSIONAL ENGINEER JEFFERSON DU C 86537 CIVIL STATE OF CALIFORNIA
PROJECT ENGINEER 03/20/25 DATE

LOS ANGELES COUNTY PUBLIC WORKS

GUARDRAIL REPLACEMENT

VARIOUS LOCATIONS RD336 OFF-SYSTEM (EM2501)
PIUMA ROAD
PROJECT ID NO. RDC0016661
NOTES, REFERENCES, TYPICAL SECTIONS

DWG PH086888 | SHEET 2 OF 9

PLAN A

DRAFTER C. RAUDA / J. YE | DESIGNER J. DU | CHECKER A. NGUYEN | CADD PROJECT FILE NAME DES0003842 - 2025 PALISADES FIRE GUARDRAIL REPAIR.dgn | REVIEWED BY | DATE 3/20/25

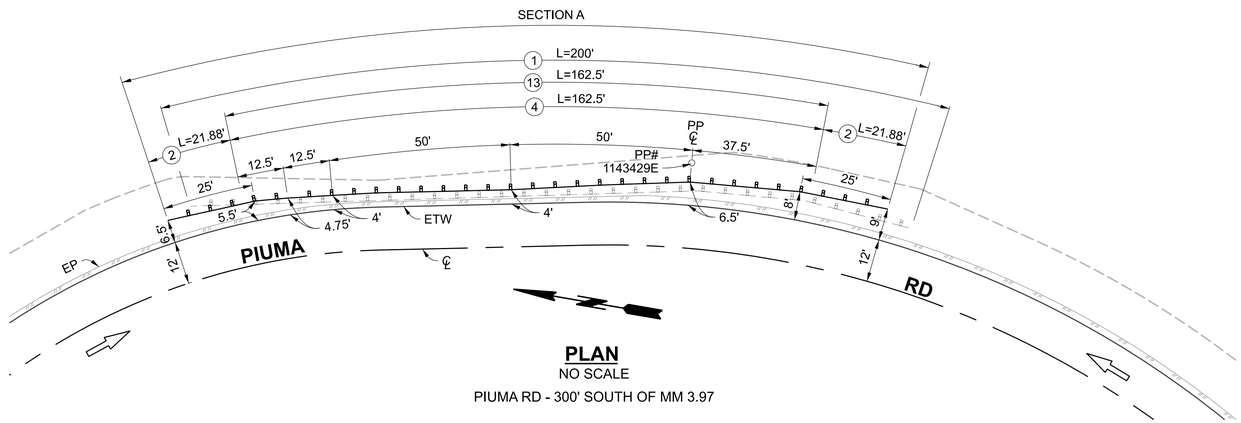

PLAN
NO SCALE
PIUMA RD - 300' SOUTH OF MM 3.97

DRAFTER	DESIGNER	CHECKER	CADD PROJECT FILE NAME	REVIEWED BY	DATE
L. KESHISHIAN	P. MARCYNYSZYN	A. NGUYEN	DES0003842 - 2025 PALISADES FIRE GUARDRAIL REPAIR.dgn		3/20/25

DATE	MARK	DESCRIPTION

REVISIONS

REGISTERED PROFESSIONAL ENGINEER
PAUL MARCYNYSZYN
C 92152
CIVIL
STATE OF CALIFORNIA

PROJECT ENGINEER 3/20/25 DATE

LOS ANGELES COUNTY PUBLIC WORKS

GUARDRAIL REPLACEMENT

VARIOUS LOCATIONS RD336 OFF-SYSTEM (EM2501)
PIUMA ROAD - 300' S/O MM 3.97
PROJECT ID NO. RDC0016661
PLAN

DWG PH086888 SHEET 3 OF 9

PLAN A

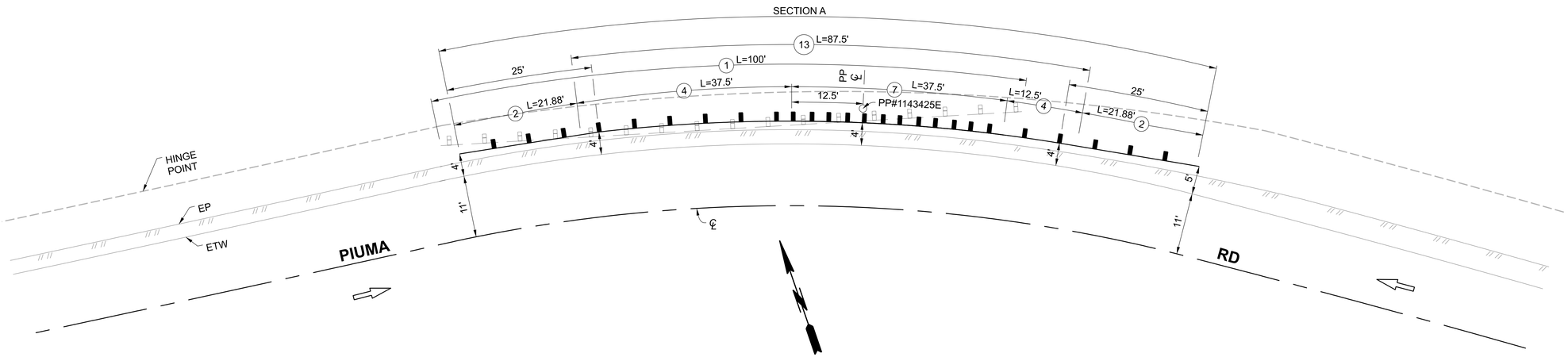

PLAN
NO SCALE
PIUMA RD - 700' N/O MM 4.38

DRAFTER	DESIGNER	CHECKER	CADD PROJECT FILE NAME	REVIEWED BY	DATE
B. CALUAG	K. PEPITO	A. NGUYEN	DES0003842 - 2025 PALISADES FIRE GUARDRAIL REPAIR.dgn		3/20/25

DATE	MARK	DESCRIPTION

REVISIONS

REGISTERED PROFESSIONAL ENGINEER
KRISTINE E. PEPITO
C 96765
CIVIL
STATE OF CALIFORNIA

PROJECT ENGINEER 3-20-2025 DATE

LOS ANGELES COUNTY PUBLIC WORKS

GUARDRAIL REPLACEMENT

VARIOUS LOCATIONS RD336 OFF-SYSTEM (EM2501)
PIUMA RD - 700' N/O MM 4.38
PROJECT ID NO. RDC0016661
PLAN

DWG PH086888 | SHEET 4 OF 9

PLAN A

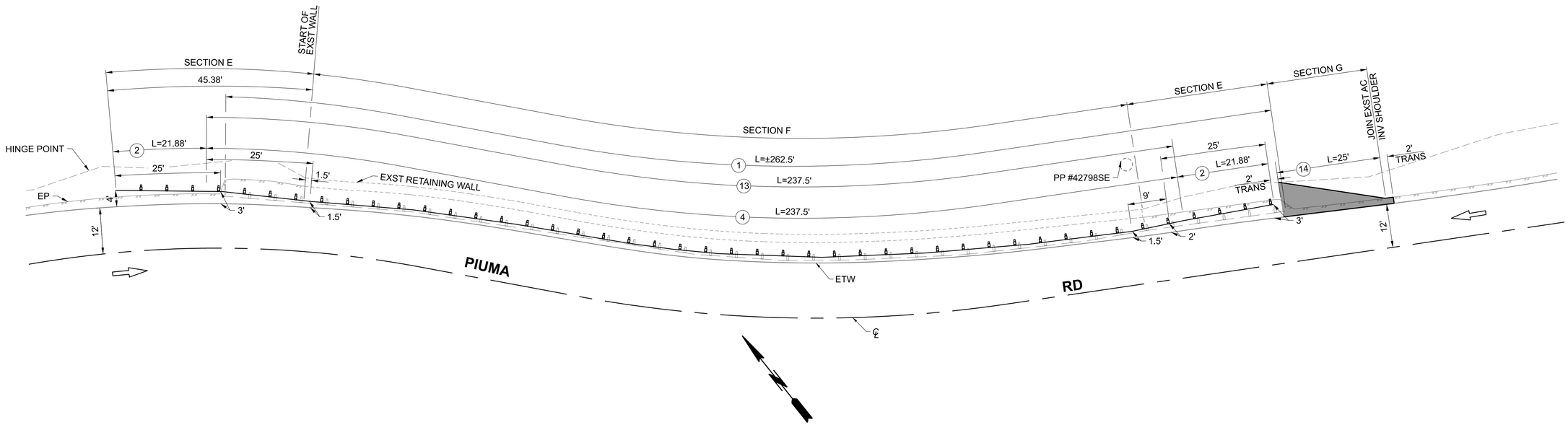

PLAN
NO SCALE
PIUMA RD AT MM 4.38

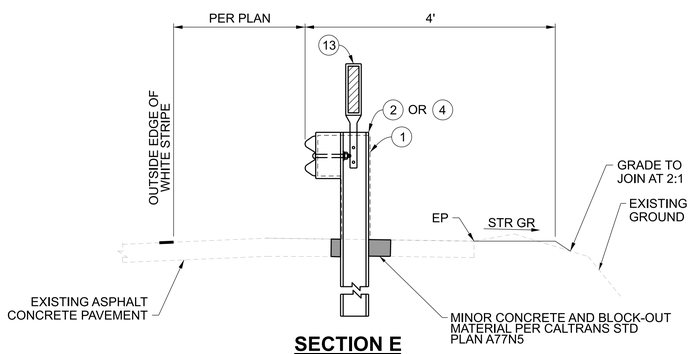

SECTION E
NOT TO SCALE

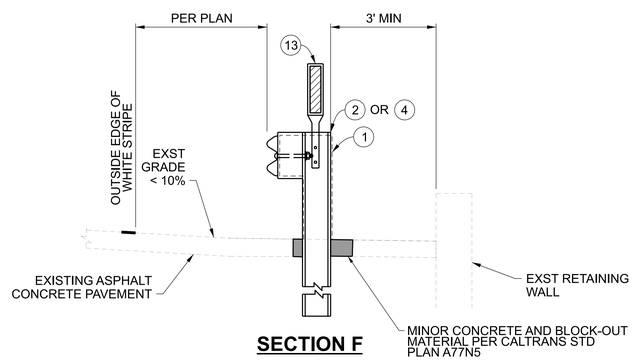

SECTION F
NOT TO SCALE

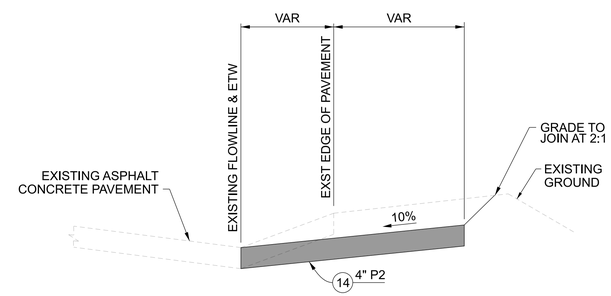

SECTION G
NOT TO SCALE

DATE	MARK	DESCRIPTION

REVISIONS

REGISTERED PROFESSIONAL ENGINEER PAUL MARCYNYSZYN C 92152 CIVIL STATE OF CALIFORNIA
3/20/25
PROJECT ENGINEER DATE

LOS ANGELES COUNTY PUBLIC WORKS

GUARDRAIL REPLACEMENT

VARIOUS LOCATIONS RD336 OFF-SYSTEM (EM2501)
PIUMA RD AT MM 4.38
PROJECT ID NO. RDC0016661
PLAN

DWG PH086888 | SHEET 5 OF 9

PLAN A

DRAFTER J. YE | DESIGNER P. MARCYNYSZYN | CHECKER A. NGUYEN | CADD PROJECT FILE NAME DES0003842 - 2025 PALISADES FIRE GUARDRAIL REPAIR.dgn | REVIEWED BY | DATE 3/20/25

DATE: 8/4/2025 TIME: 9:54:58 AM FILE: pw://pwedmsprod01.dpw.co.la.ca.us:PW_INT2/Documents/DEPARTMENT PROJECTS (PIW)/DES/DES0003842 - 2025 Palisades File - Guardrail Repair/DES Guardrail/TD2/COMBINED PLANS/4-CAD/DES0003842 - 2025 PALISADES FIRE GUARDRAIL REPAIR.dgn

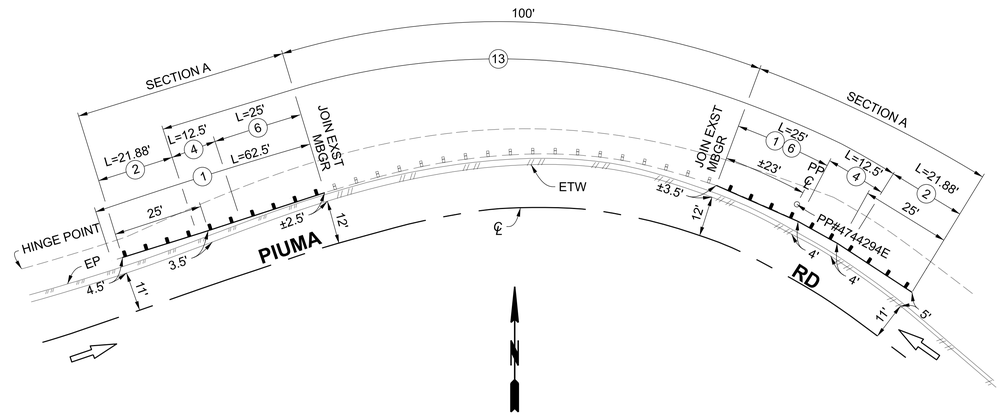

PLAN
NO SCALE
PIUMA RD MM 4.52

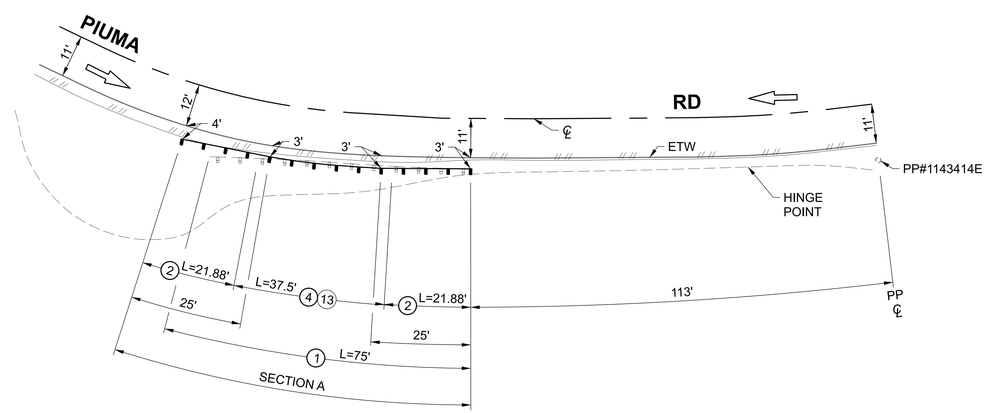

PLAN
NO SCALE
24680 PIUMA RD

DATE	MARK	DESCRIPTION

REVISIONS

REGISTERED PROFESSIONAL ENGINEER
JEFFERSON DU
C 86537
CIVIL
STATE OF CALIFORNIA

PROJECT ENGINEER 03/20/25 DATE

LOS ANGELES COUNTY PUBLIC WORKS

GUARDRAIL REPLACEMENT

VARIOUS LOCATIONS RD336 OFF-SYSTEM (EM2501)
PIUMA ROAD - 24680 AND MM 4.52
PROJECT ID NO. RDC0016661
PLAN

DWG PH086888 | SHEET 6 OF 9

PLAN A

DRAFTER J. MENDOZA | DESIGNER J. DU | CHECKER A. NGUYEN | CADD PROJECT FILE NAME DES0003842 - 2025 PALISADES FIRE GUARDRAIL REPAIR.dgn | REVIEWED BY | DATE 3/20/25

DATE: 4/9/2025 TIME: 5:11:53 PM FILE: pw://pwedmsprod01.dpw.co.la.ca.us:PW_INT2/Documents/DEPARTMENT PROJECTS (PIW)/DES/DES0003842 - 2025 Palisades File - Guardrail Repair/DES Guardrail/TD2/COMBINED PLANS/4-CAD/DES0003842 - 2025 PALISADES FIRE GUARDRAIL REPAIR.dgn

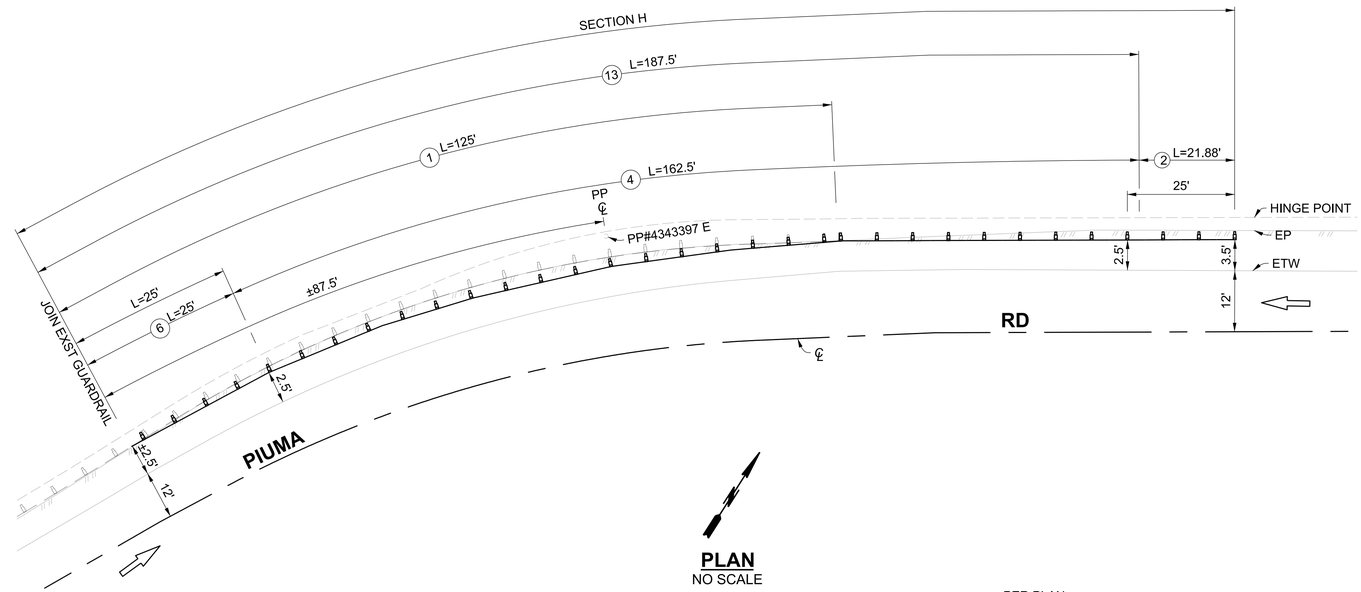

PLAN
NO SCALE
PIUMA RD 300' S/O MM5.25

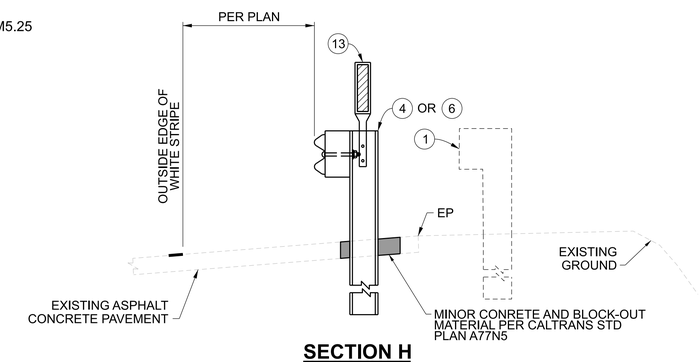

SECTION H
NOT TO SCALE

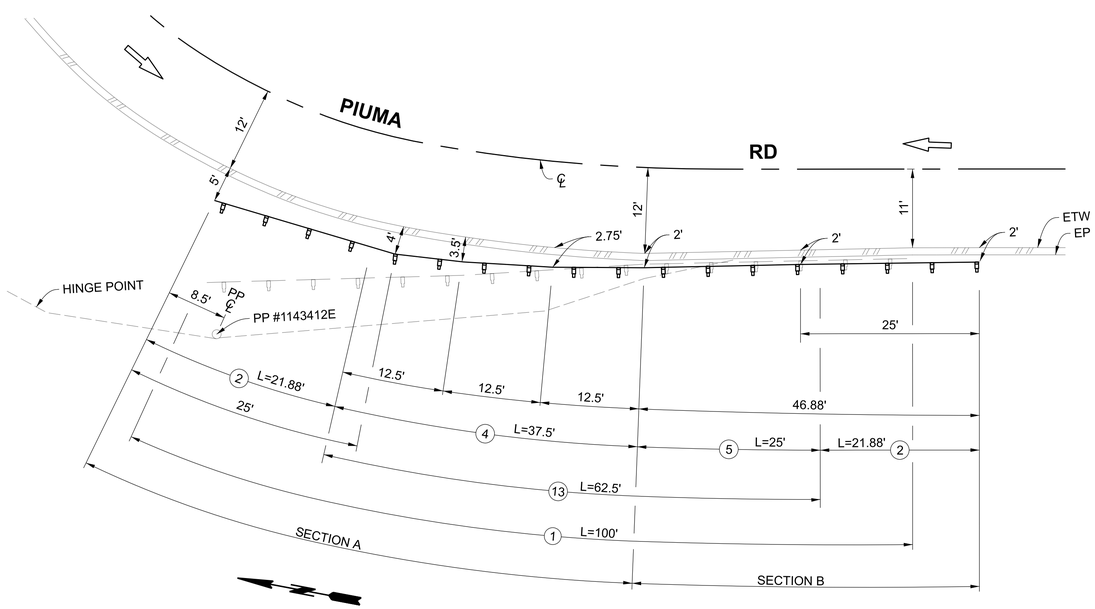

PLAN
NO SCALE
PIUMA RD 400' S/O MM 5.09

DATE	MARK	DESCRIPTION

REVISIONS

REGISTERED PROFESSIONAL ENGINEER JEFFERSON DU C 86537 CIVIL STATE OF CALIFORNIA

PROJECT ENGINEER 03/20/25 DATE

LOS ANGELES COUNTY PUBLIC WORKS

GUARDRAIL REPLACEMENT

VARIOUS LOCATIONS RD336 OFF-SYSTEM (EM2501)
PIUMA RD - 400' S/O MM 5.09 AND 300' S/O MM 5.25
PROJECT ID NO. RDC0016661
PLAN

DWG PH086888 | SHEET 7 OF 9

PLAN A

DRAFTER O. EL-RABAA | DESIGNER J. DU | CHECKER A.T. NGYUEN | CADD PROJECT FILE NAME DES0003842 - 2025 PALISADES FIRE GUARDRAIL REPAIR.dgn | REVIEWED BY | DATE 3/20/25

DATE: 8/4/2025 TIME: 9:42:38 AM FILE: pw://pwedmsprod01.dpw.co.la.ca.us:PW_INT2/Documents/DEPARTMENT PROJECTS (PIW)/DES/DES0003842 - 2025 Palisades Fire - Guardrail Repair/DES Guardrail/TD2/COMBINED PLANS/4-CAD/DES0003842 - 2025 PALISADES FIRE GUARDRAIL REPAIR.dgn

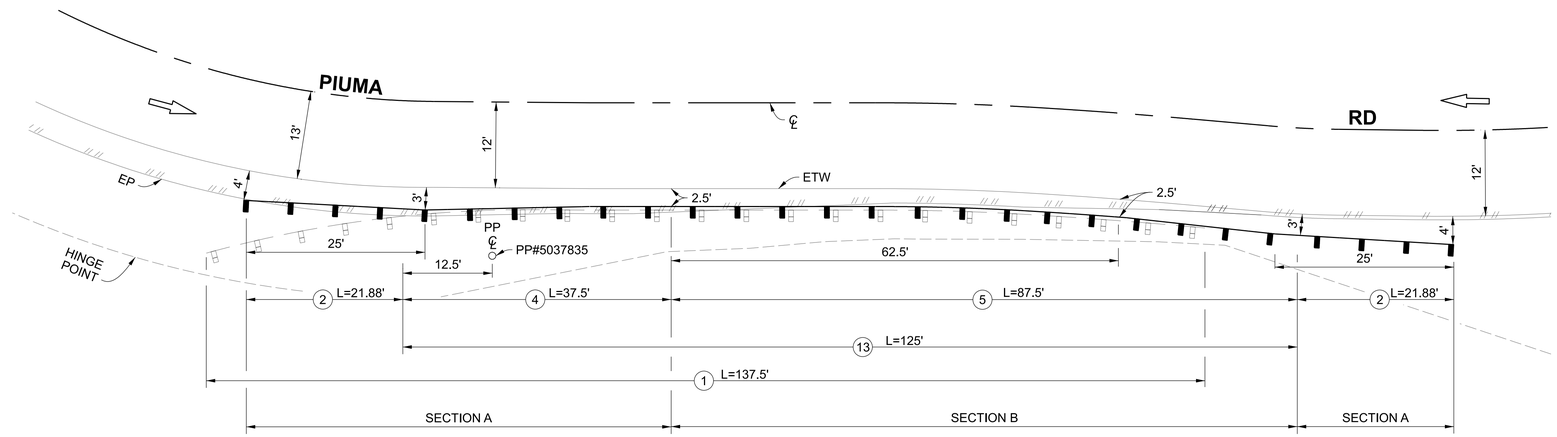

PLAN

NO SCALE

PIUMA RD - 180' S/O MM 5.62

DATE	MARK	DESCRIPTION

REVISIONS

REGISTERED PROFESSIONAL ENGINEER
KRISTINE E. PEPITO
C 96765
CIVIL
STATE OF CALIFORNIA

PROJECT ENGINEER 3-20-2025 DATE

LOS ANGELES COUNTY PUBLIC WORKS

GUARDRAIL REPLACEMENT

VARIOUS LOCATIONS RD336 OFF-SYSTEM (EM2501)

PIUMA RD - 180' S/O MM 5.62

PROJECT ID NO. RDC0016661

PLAN

DWG PH086888 | SHEET 8 OF 9

PLAN A

DRAFTER M. GAMINO | DESIGNER K. PEPITO | CHECKER A. NGUYEN | CADD PROJECT FILE NAME DES0003842 - 2025 PALISADES FIRE GUARDRAIL REPAIR.dgn | REVIEWED BY | DATE 3/20/25

DATE: 4/8/2025 TIME: 10:16:38 AM FILE: pw://pwedmsprod01.dpw.co.la.ca.us:PW_INT2/Documents/DEPARTMENT PROJECTS (PIW)/DES/DES0003842 - 2025 Palisades File - Guardrail Repair/DES Guardrail/TD2/COMBINED PLANS/4-CAD/DES0003842 - 2025 PALISADES FIRE GUARDRAIL REPAIR.dgn

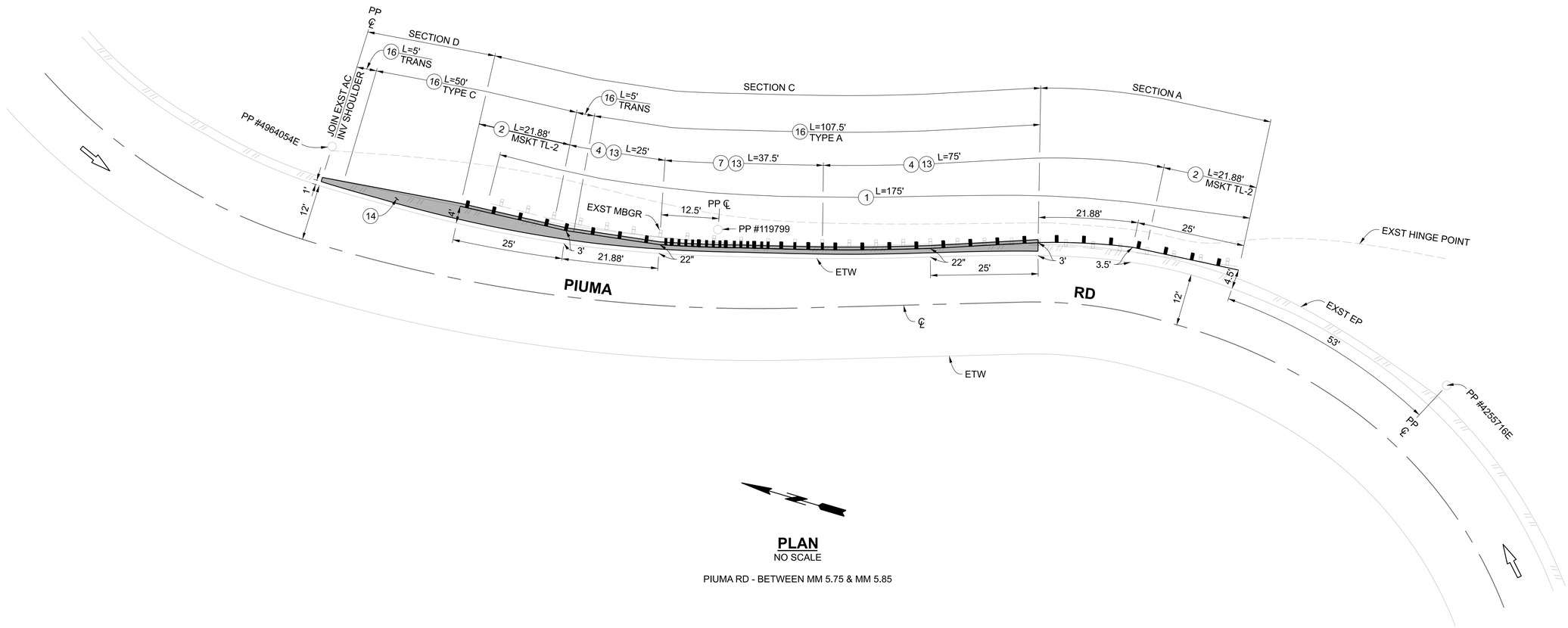

PLAN
NO SCALE

PIUMA RD - BETWEEN MM 5.75 & MM 5.85

DRAFTER	DESIGNER	CHECKER	CADD PROJECT FILE NAME	REVIEWED BY	DATE
P. MARCYNYSZYN	P. MARCYNYSZYN	A.T. NGYUEN	DES0003842 - 2025 PALISADES FIRE GUARDRAIL REPAIR.dgn		

DATE	MARK	DESCRIPTION

REVISIONS

REGISTERED PROFESSIONAL ENGINEER PAUL MARCYNYSZYN C 92152 CIVIL STATE OF CALIFORNIA

PROJECT ENGINEER 3/20/25 DATE

LOS ANGELES COUNTY PUBLIC WORKS

GUARDRAIL REPLACEMENT

VARIOUS LOCATIONS RD336 OFF-SYSTEM (EM2501)
PIUMA RD - BETWEEN MM 5.75 & MM 5.85
PROJECT ID NO. RDC0016661
PLAN

DWG PH086888 | SHEET 9 OF 9

PLAN A

DATE: 5/5/2025 TIME: 10:19:11 AM FILE: pw://pwedmsprod01.dpw.co.la.ca.us:PW_INT2/Documents/DEPARTMENT PROJECTS (PIW)/DES/DES0003842 - 2025 Palisades File - Guardrail Repair/DES Guardrail/TD2/COMBINED PLANS/4-CAD/DES0003842 - 2025 PALISADES FIRE GUARDRAIL REPAIR.dgn

LOS ANGELES COUNTY PUBLIC WORKS

GUARDRAIL REPLACEMENT
VARIOUS LOCATIONS RD336
OFF-SYSTEM (EM2501)

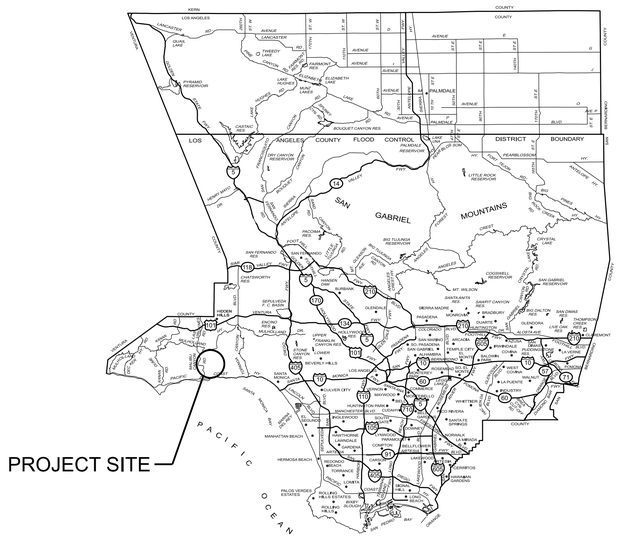

LOCATION MAP
NOT TO SCALE

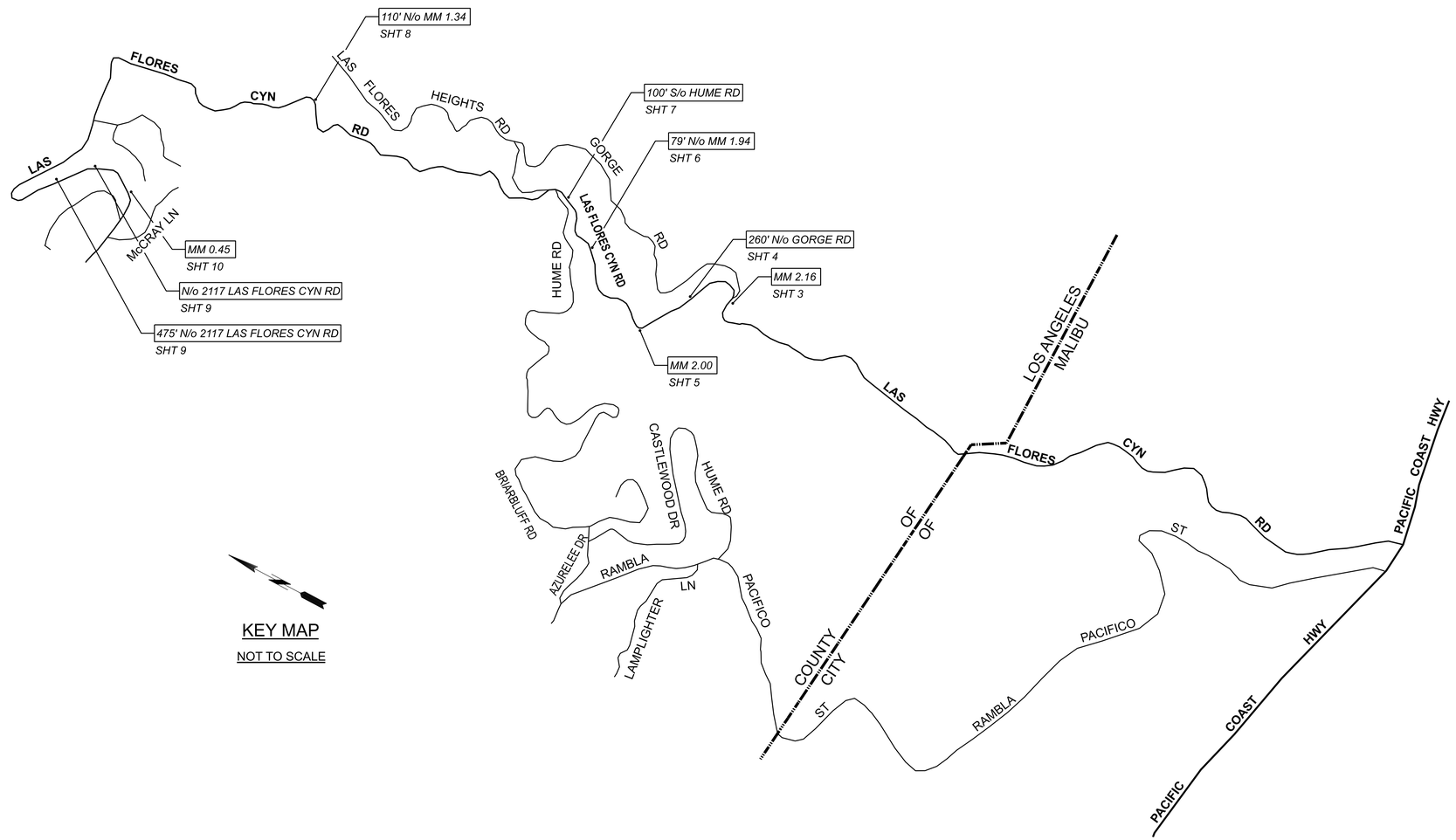

KEY MAP
NOT TO SCALE

INDEX TO PROJECT PLANS

SHEET NUMBER	DESCRIPTION
1	TITLE SHEET
2	NOTES AND REFERENCES
3 - 10	PLANS AND SECTIONS

DRAFTER	J. DOAN
DESIGNER	J. DOAN
CHECKER	T. HO
CADD PROJECT FILE NAME	Las Flores Cyn Rd Guardrail.dgn

DATE	MARK	DESCRIPTION

REVISIONS

REGISTERED PROFESSIONAL ENGINEER
THOMAS HO
C 60649
CIVIL
STATE OF CALIFORNIA

PROJECT ENGINEER 7/30/2025 DATE

LOS ANGELES COUNTY PUBLIC WORKS

GUARDRAIL REPLACEMENT
VARIOUS LOCATIONS RD336 OFF-SYSTEM (EM2501)
LAS FLORES CANYON ROAD
PROJECT ID NO. RDC0016661
TITLE SHEET

DWG PH086888 SHEET 1 OF 10

PLAN B

DATE: $DATE$ TIME: $TIME$ FILE: $FILEL$

CONSTRUCTION LEGEND

1. REMOVE & DISPOSE OF EXISTING GUARDRAIL (INCLUDING POSTS)
2. IN-LINE TERMINAL SYSTEM (TL2) AS PER PLAN
3. IN-LINE TERMINAL SYSTEM (TL2) AS PER PLAN
4. MIDWEST GUARDRAIL SYSTEM (STEEL POST W/ PLASTIC BLOCK)
5. MIDWEST GUARDRAIL SYSTEM (STEEL POST W/ PLASTIC BLOCK) (8' POST)
6. MIDWEST GUARDRAIL SYSTEM TRANSITION TO METAL BEAM GUARDRAIL
7. STRENGTHENED MIDWEST GUARDRAIL SYSTEM (CALTRANS STD PLAN A77R4)
8. MIDWEST GUARDRAIL SYSTEM END ANCHOR ASSEMBLY (TYPE SFT-M)
9. MIDWEST GUARDRAIL SYSTEM BURIED POST END ANCHOR (TYPE B-F)
10. TRANSITION RAILING (TYPE AGT)
11. CONCRETE BARRIER
12. CRASH CUSHION
13. DELINEATOR PER CALTRANS STD PLAN A77N4
14. AC PAVEMENT
15. REMOVE EXISTING INVERTED SHOULDER
16. HOT MIX ASPHALT DIKE (TYPE PER PLAN)
17. RURAL CATCH BASIN

CONSTRUCTION SYMBOLS

(#) INDICATES WORK PER CONSTRUCTION LEGEND

(ltr.) CURVE DATA SHOWN IN TABLE ON PLAN

2" P4 — ABOVE LINE: INDICATES THE TYPE OF STANDARD OR THICKNESS OF SURFACE MATERIAL IN INCHES, STANDARD PLAN VARIABLES; CURB RAMP CASE, TYPE, SECTION AND DETAIL; OR TREE PLANTING CASE

5" CMB — BELOW LINE: REFERENCE TO DETAIL OR THICKNESS OR BASE MATERIAL IN INCHES OR TREE WELL CASE

(#) A x B / 4" CMB — ABOVE LINE: A = LENGTH PARALLEL TO CURB; B = LENGTH PERDICULAR TO CURB

A / 3 — ABOVE LINE: NAME OF SECTION; BELOW LINE: SHEET NUMBER OF THE REFERENCED SECTION IF THE SECTION IS NOT ON THE SAME PAGE

INDICATES DIRECTION OF TRAFFIC

CONSTRUCTION NOTES

1. STANDARD PLANS REFERENCED ARE PER THE STANDARD PLANS FOR PUBLIC WORKS CONSTRUCTION (SPPWC) 2021 EDITION UNLESS OTHERWISE NOTED

GUARDRAIL NOTES

1. ALL STD GUARDRAIL INSTALLATION SHALL BE STEEL POSTS WITH NOTCHED PLASTIC BLOCKS.
2. ALL GUARDRAIL LENGTH AND LOCATION ARE MEASURED ALONG THE FACE OF THE RAILING, UNLESS OTHERWISE SHOWN ON THE PLANS AND DETAILS OR AS DIRECTED BY THE ENGINEER.
3. EACH TERMINAL SYSTEM INSTALLED MUST BE IDENTIFIED BY PAINTING THE TYPE OF THE TERMINAL SYSTEM IN NEAT BLACK LETTERS AND FIGURES 2 INCHES HIGH ON THE BACKSIDE OF THE RAIL ELEMENT BETWEEN SYSTEM POST NUMBERS 4 AND 5.
4. FOR INSTALLATION OF TERMINAL SYSTEMS, BLACK AND YELLOW RETROREFLECTIVE STRIPED SHEETING SHALL BE ADHERED TO THE APPROACH END (S) OF THE GUARDRAIL. THE STRIPES SHALL BE SLOPED DOWN AT AN ANGLE OF 45 DEGREES TOWARDS THE SIDE OF THE ROADWAY ON WHICH TRAFFIC IS TO PASS THE OBSTRUCTION BEING PROTECTED. THE SHEETING SHALL BE CONSISTENT WITH THE DESIGN PATTERN, COLORS, AND DIRECTION OF A TYPE "P(CA)" OBJECT MARKER PER CALIFORNIA MANUAL OF UNIFORM TRAFFIC CONTROL DEVICES (MUTCD) 2014 EDITION, SECTION 2C.65.
5. THE PROPOSED TERMINAL SYSTEM SHALL BE INSTALLED IN A STRAIGHT FLARE OVER THE ENTIRE LENGTH AND SHOULD NOT BE INSTALLED ON A PARABOLIC CURVE.
6. IN-LINE TERMINAL SYSTEMS MUST USE STEEL POSTS AND PLASTIC BLOCKS, AND INSTALLED PER MANUFACTURER'S RECOMMENDATIONS.
7. INSTALL DELINEATORS PER CALTRANS STANDARD PLANS A77N4 AND A73C, CLASS 1, TYPE F. THEY MUST BE PLACED 25 FEET FROM THE END OF THE END TREATMENT AND SPACED AT 25-FOOT INTERVALS THEREAFTER.
8. (1) CONSTRUCT MINOR CONCRETE VEGETATION CONTROL AT ALL LOCATIONS PER CALTRANS STANDARD PLANS A77N5 THROUGH A77N11 EXCEPT WHERE MINOR CONCRETE & BLOCK-OUT MATERIAL ARE ALREADY SHOWN ON PLAN.

ABBREVIATIONS

ABBREVIATION	WORD OR WORDS
CMP	CORRUGATED METAL PIPE
CMU	CONCRETE MASONRY UNIT
CONT	CONTINUOUS
EP	EDGE OF PAVEMENT
ES	EDGE OF SHOULDER
ETW	EDGE OF TRAVELED WAY
FL	FLOW LINE
L	LENGTH
LACPW	LOS ANGELES COUNTY PUBLIC WORKS
PIP	PROTECT IN PLACE
PP	POWER POLE
PROP	PROPOSED
SPPWC	STANDARD PLANS FOR PUBLIC WORKS CONSTRUCTION
TOT	TOTAL

STANDARD PLANS

STATE OF CALIFORNIA DEPARTMENT OF TRANSPORTATION
STANDARD PLANS (2024 EDITION)

A73C	DELINEATORS, CHANNELIZERS AND BARRICADES
A77L2	MIDWEST GUARDRAIL SYSTEM STANDARD RAILING SECTION (STEEL POST WITH NOTCHED WOOD OR NOTCHED RECYCLED PLASTIC BLOCK)
A77L4	MIDWEST GUARDRAIL SYSTEM TRANSITION TO METAL BEAM GUARDRAIL
A77N3	MIDWEST GUARDRAIL SYSTEM TYPICAL LINE POST EMBEDMENT AND HINGE POINT OFFSET DETAILS
A77N4	MIDWEST GUARDRAIL SYSTEM TYPICAL RAILING DELINEATION AND DIKE POSITION DETAILS
A77N5	MINOR CONCRETE VEGETATION CONTROL GUARDRAIL SYSTEM
A77N5A	MINOR CONCRETE VEGETATION CONTROL GUARDRAIL SYSTEM NARROW VEGETATION CONTROL INSTALLATION
A77N6	MINOR CONCRETE VEGETATION CONTROL GUARDRAIL SYSTEM FOR TERMINAL SYSTEM END TREATMENTS
A77P2	MIDWEST GUARDRAIL SYSTEM TYPICAL LAYOUTS FOR EMBANKMENTS
A77P3	MIDWEST GUARDRAIL SYSTEM TYPICAL LAYOUTS FOR EMBANKMENTS
A77R1	MIDWEST GUARDRAIL SYSTEM TYPICAL LAYOUTS FOR FIXED OBJECTS BETWEEN SEPARATE ROADBEDS (TWO-WAY TRAFFIC)
A77R3	MIDWEST GUARDRAIL SYSTEM TYPICAL LAYOUTS FOR ROADSIDE FIXED OBJECTS
A77R4	MIDWEST GUARDRAIL SYSTEM TYPICAL LAYOUTS FOR ROADSIDE FIXED OBJECTS
A77S1	MIDWEST GUARDRAIL SYSTEM END ANCHOR ASSEMBLY (TYPE SFT-M)
A77T2	MIDWEST GUARDRAIL SYSTEM BURIED POST END ANCHOR (TYPE B-F)
A79A1	TRANSITION RAILING (TYPE AGT)
A87B	HOT MIX ASPHALT DIKES
(1) A77N7	MINOR CONCRETE VEGETATION CONTROL GUARDRAIL SYSTEM AT STRUCTURE APPROACH
A77N8	MINOR CONCRETE VEGETATION CONTROL GUARDRAIL SYSTEM AT FIXED OBJECT
A77N9	MINOR CONCRETE VEGETATION CONTROL GUARDRAIL SYSTEM AT FIXED OBJECT
A77N10	MINOR CONCRETE VEGETATION CONTROL GUARDRAIL SYSTEM AT FIXED OBJECT
A77N11	MINOR CONCRETE VEGETATION CONTROL GUARDRAIL SYSTEM MISCELLANEOUS DETAILS

SSPWC, 2021 EDITION

100-2	TOPOGRAPHY SYMBOLS AND STANDARD ABBREVIATIONS
133-4	ASPHALT CONCRETE PAVEMENT REPLACEMENT

CITY OF LOS ANGELES BUREAU OF ENGINEERING

S-342-4	FRAME AND GRATING FOR CATCH BASINS (BICYCLE SAFE)

LOS ANGELES COUNTY DEPARTMENT OF PUBLIC WORKDS STANDARD PLANS, 2000 EDITION

3015-0	RURAL CATCH BASIN

TOPOGRAPHY LEGEND

EXISTING TOPOGRAPHY | PROPOSED IMPROVEMENTS

CURB
CURB AND GUTTER
GUTTER
PAVEMENT — CONCRETE
AC
CURB RAMP
BUILDING
FENCE
GUY POLE
DRIVEWAY
FIRE HYDRANT
GUY WIRE
MANHOLE
POLE
R/W LINE
PULL BOX
SIDEWALK — SHADED IF NOT CONTINUOUS
SIGNAL CONTROL BOX
SIGNAL — FLASHING
TRAFFIC
STREET LIGHT
PALM TREE
OAK TREE
OTHER TREE
VALVE
VAULT

AC PAVEMENT CLASS AND GRADE LEGEND

P2 C2-PG 64-10 P4 D2-PG 64-10

DATE	MARK	DESCRIPTION
11/3/2025	1	ADDED MINOR CONCRETE VEGETATION CONTROL

REVISIONS

REGISTERED PROFESSIONAL ENGINEER — THOMAS RO — C 60649 — CIVIL — STATE OF CALIFORNIA
PROJECT ENGINEER 7/30/2025 DATE

LOS ANGELES COUNTY PUBLIC WORKS

GUARDRAIL REPLACEMENT

VARIOUS LOCATIONS RD336 OFF-SYSTEM (EM2501)
LAS FLORES CANYON ROAD
PROJECT ID NO. RDC0016661
NOTES AND REFERENCES

DWG PH086888 | SHEET 2 OF 10

DRAFTER J. DOAN | DESIGNER J. DOAN | CHECKER T. HO | CADD PROJECT FILE NAME Las Flores Cyn Rd Guardrail.dgn | REVIEWED BY ... DATE

DATE: $DATE$ TIME: $TIME$ FILE: $FILEL$

PLAN B

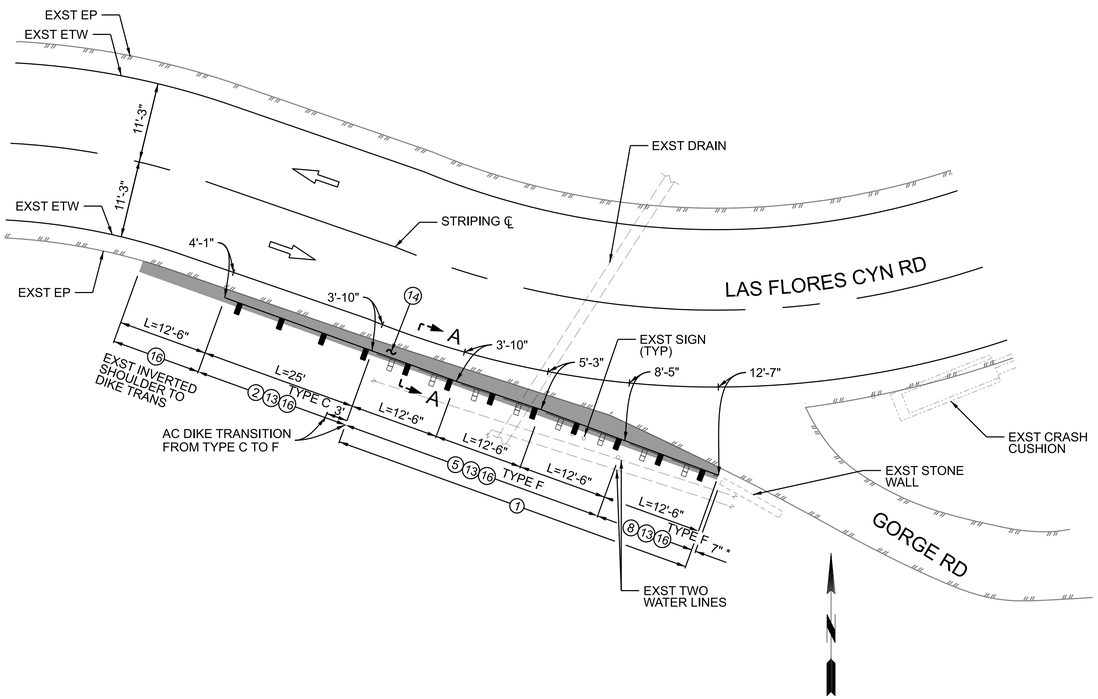

NOTES:

2 IS A TL2, MSKT-SP-MGS

* MAINTAIN CLEAR SPACING BETWEEN GUARDRAIL END CAP AND END OF EXST STONE WALL

PLAN

NOT TO SCALE

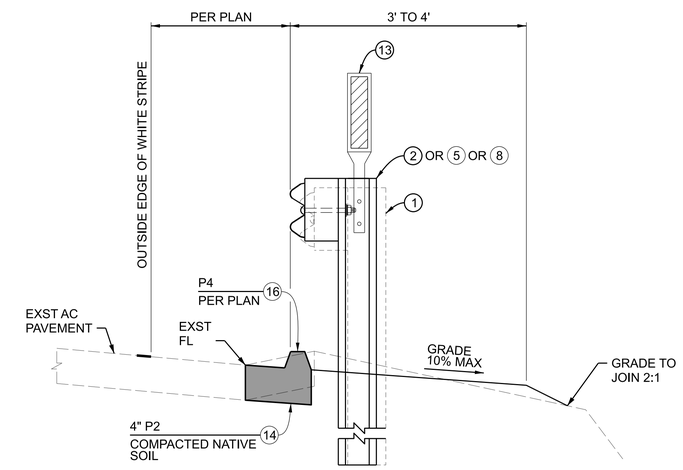

SECTION A-A

NOT TO SCALE

DATE	MARK	DESCRIPTION

REVISIONS

REGISTERED PROFESSIONAL ENGINEER MAN TAT NG NO. C70322 CIVIL STATE OF CALIFORNIA

PROJECT ENGINEER 7/30/2025 DATE

LOS ANGELES COUNTY PUBLIC WORKS

GUARDRAIL REPLACEMENT

VARIOUS LOCATIONS RD336 OFF-SYSTEM (EM2501)
LAS FLORES CANYON ROAD AT MM 2.16
PROJECT ID NO. RDC0016661
PLAN & SECTION

DWG PH086888 | SHEET 3 OF 10

PLAN B

DRAFTER J. NG | DESIGNER J. NG | CHECKER M.ORELLANA | CADD PROJECT FILE NAME Las Flores Cyn Rd@MM2.16.dgn | REVIEWED BY | DATE

DATE: $DATE$ TIME: $TIME$ FILE: $FILEL$

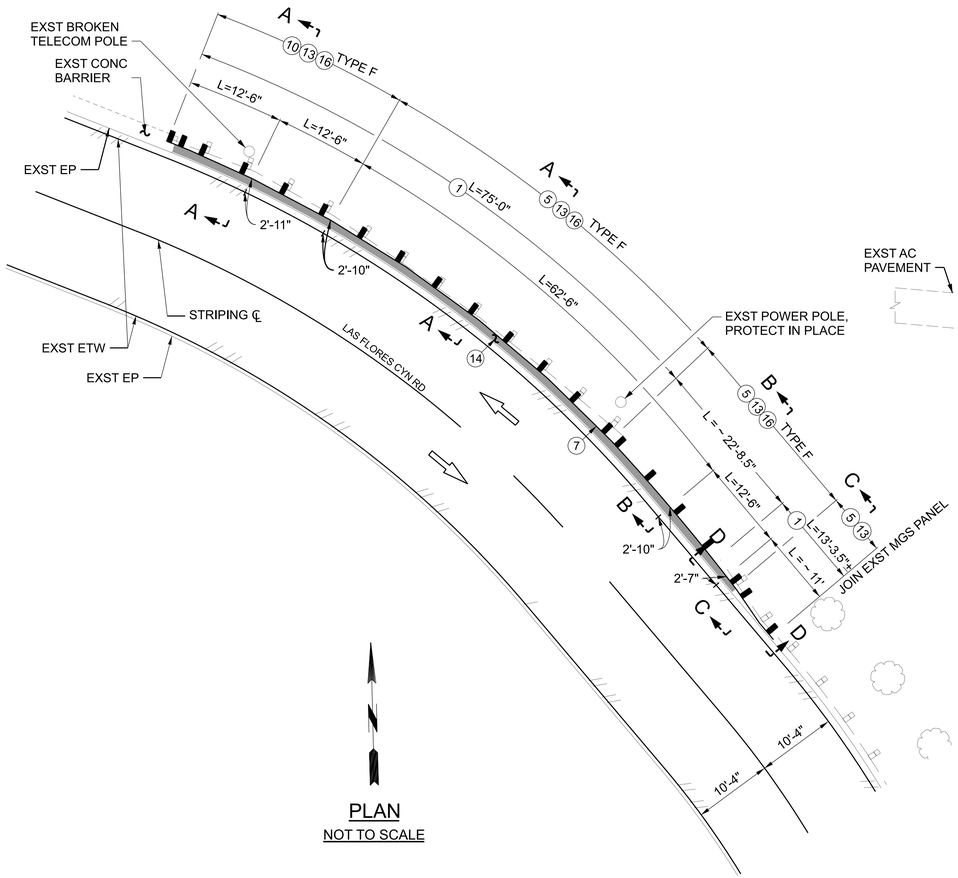

PLAN
NOT TO SCALE

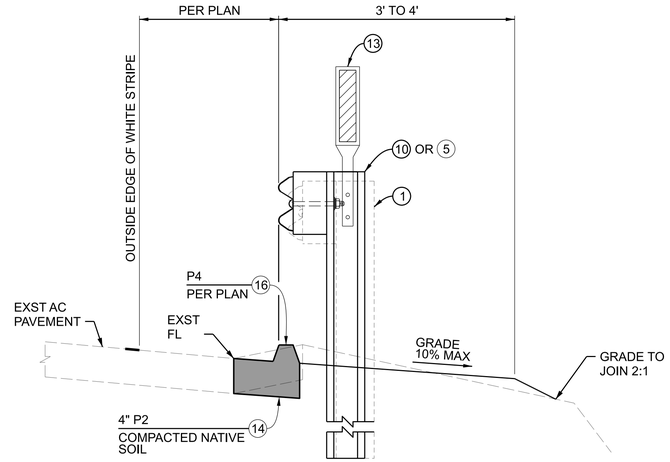

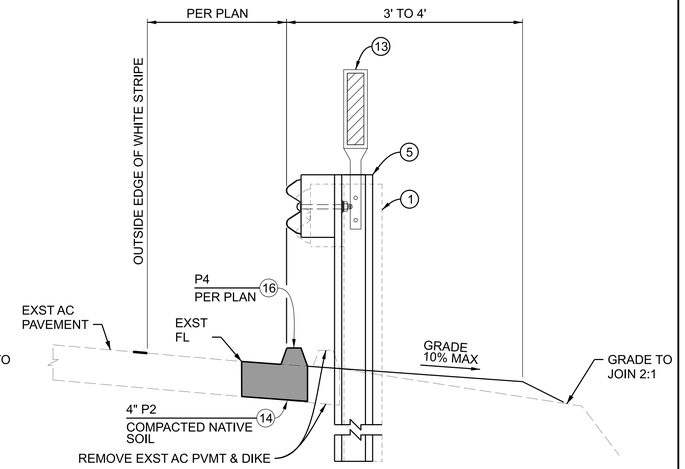

SECTION B-B
NOT TO SCALE

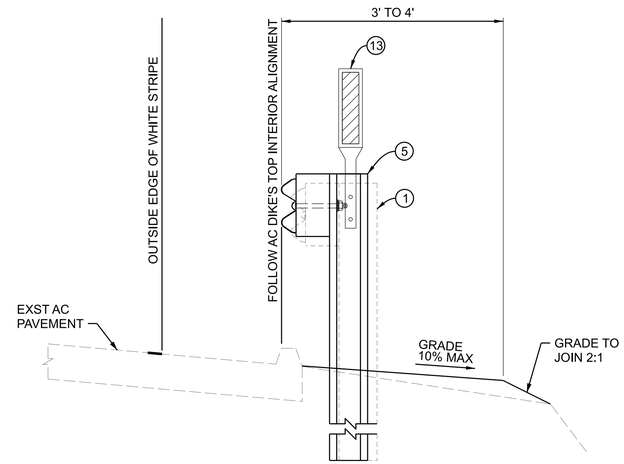

SECTION C-C
NOT TO SCALE

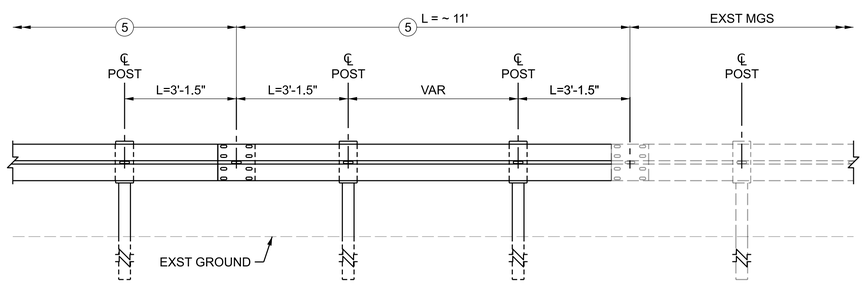

PROFILE D-D
NOT TO SCALE

DATE	MARK	DESCRIPTION

REVISIONS

REGISTERED PROFESSIONAL ENGINEER MAN TAT NG NO. C70322 CIVIL STATE OF CALIFORNIA

PROJECT ENGINEER 7/30/2025 DATE

LOS ANGELES COUNTY PUBLIC WORKS

GUARDRAIL REPLACEMENT
VARIOUS LOCATIONS RD336 OFF-SYSTEM (EM2501)
LAS FLORES CANYON ROAD, 260' N/O GORGE ROAD
PROJECT ID NO. RDC0016661
PLAN & SECTIONS

DWG PH086888 | SHEET 4 OF 10

PLAN B

DRAFTER J. NG | DESIGNER J. NG | CHECKER M.ORELLANA | CADD PROJECT FILE NAME Las Flores Cyn Rd@260' NO Gorge Rd.dgn | REVIEWED BY ____ DATE ____

DATE: $DATE$ TIME: $TIME$ FILE: $FILEL$

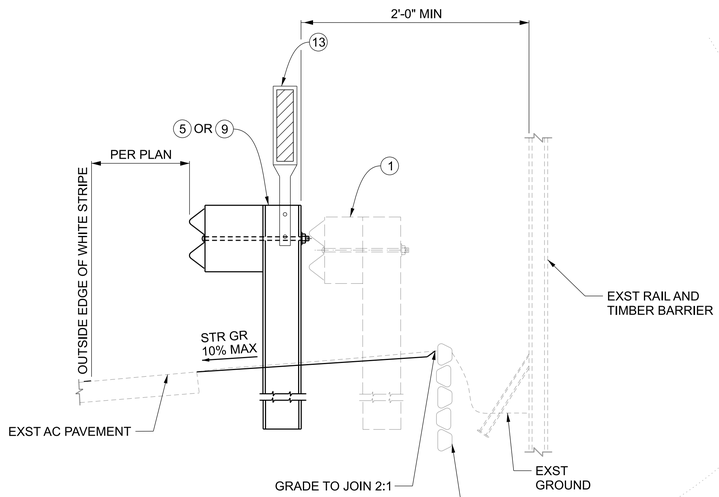

SECTION A-A
NOT TO SCALE

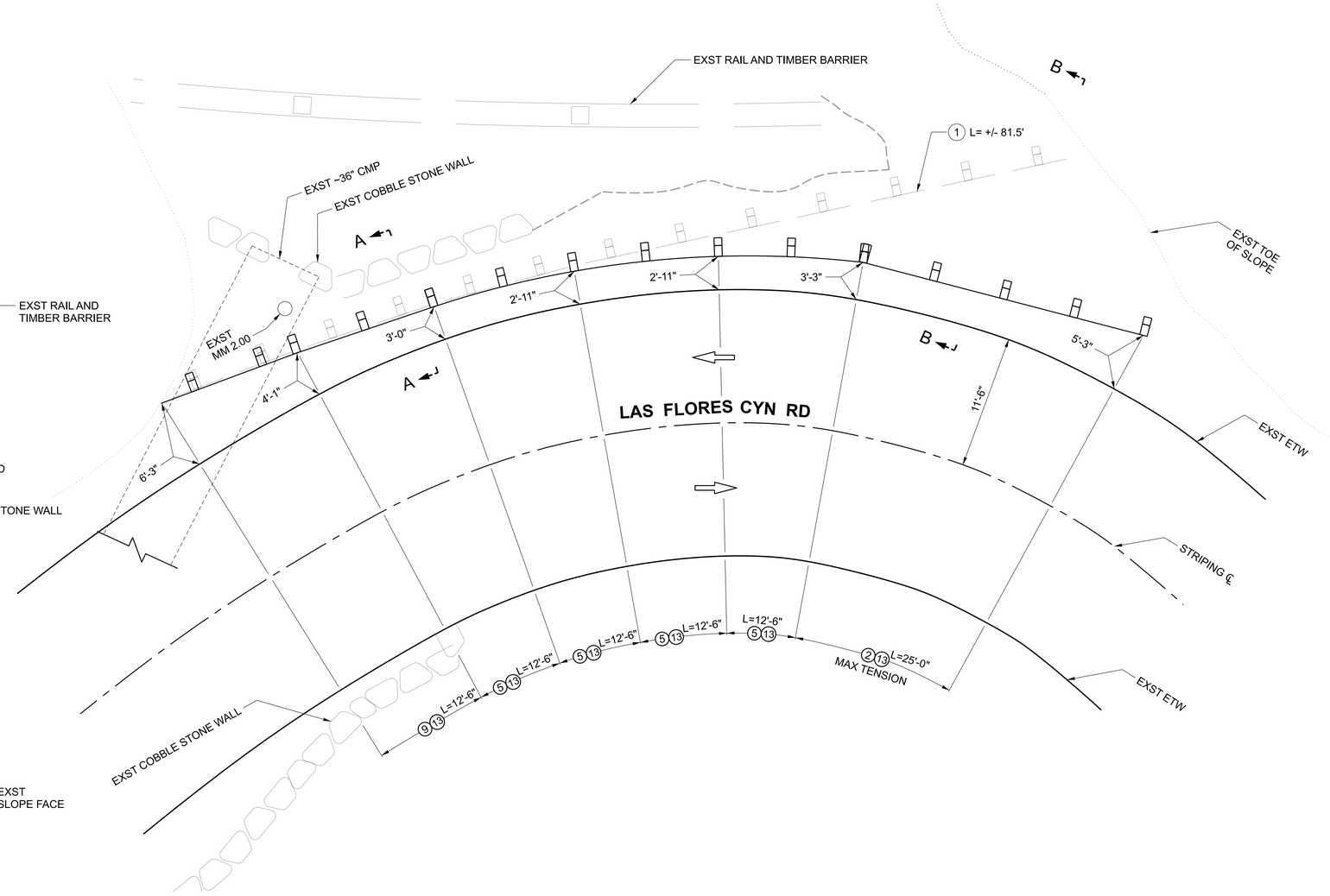

LAS FLORES CYN RD AT MM 2.00
NOT TO SCALE

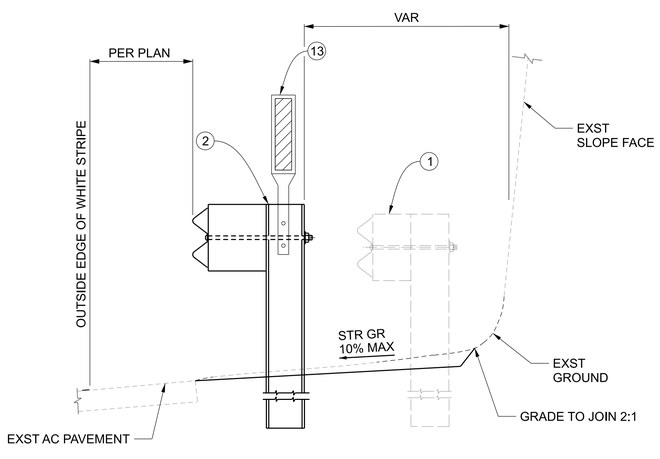

SECTION B-B
NOT TO SCALE

DATE	MARK	DESCRIPTION

REVISIONS

REGISTERED PROFESSIONAL ENGINEER
MAN TAT NG
NO. C70322
CIVIL
STATE OF CALIFORNIA

PROJECT ENGINEER 7/30/2025 DATE

LOS ANGELES COUNTY PUBLIC WORKS

GUARDRAIL REPLACEMENT

VARIOUS LOCATIONS RD336 OFF-SYSTEM (EM2501)
LAS FLORES CANYON ROAD AT MM 2.00
PROJECT ID NO. RDC0016661
PLAN AND SECTIONS

DWG PH086888 SHEET 5 OF 10

PLAN B

DRAFTER J.VU
DESIGNER J.VU
CHECKER J. NG
CADD PROJECT FILE NAME Las Flores Cyn Rd at MM 2.00.dgn
REVIEWED BY
DATE

DATE: $DATE$ TIME: $TIME$ FILE: $FILEL$

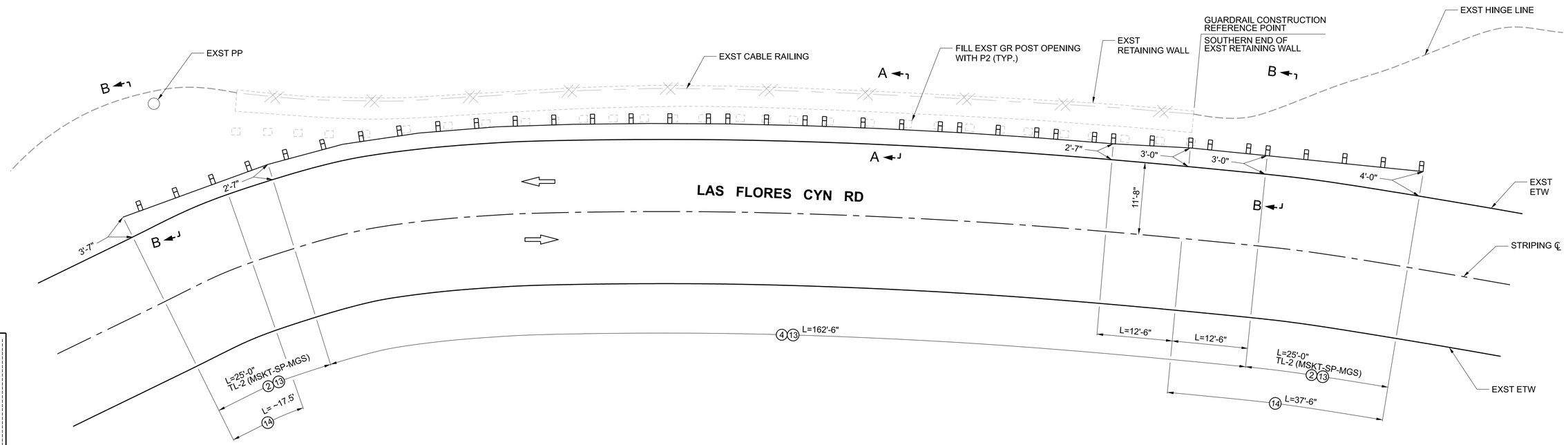

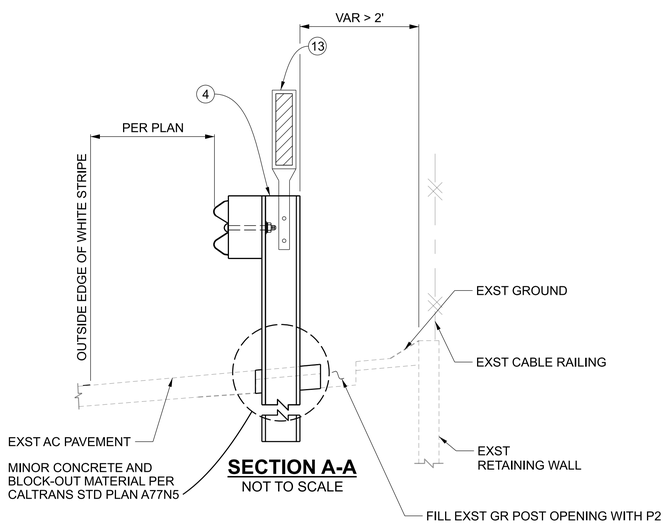

SECTION A-A
NOT TO SCALE

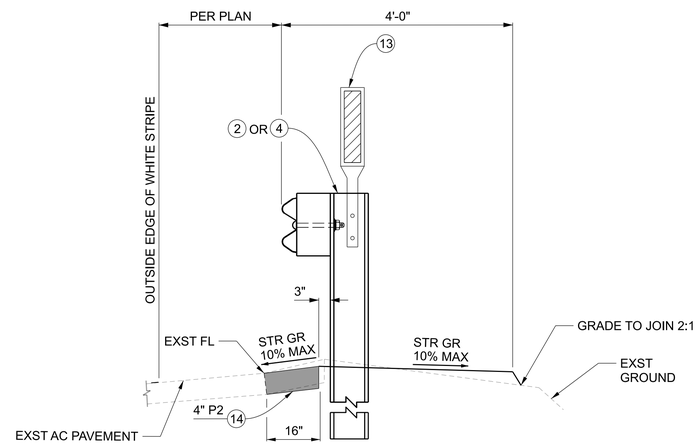

SECTION B-B
NOT TO SCALE

LAS FLORES CYN RD 79' N/O MM 1.94
NOT TO SCALE

DATE	MARK	DESCRIPTION

REVISIONS

REGISTERED PROFESSIONAL ENGINEER MAN TAT NG NO. C70322 CIVIL STATE OF CALIFORNIA

PROJECT ENGINEER 7/30/2025 DATE

LOS ANGELES COUNTY PUBLIC WORKS

GUARDRAIL REPLACEMENT

VARIOUS LOCATIONS RD336 OFF-SYSTEM (EM2501)
LAS FLORES CANYON ROAD, 79' N/O MM 1.94
PROJECT ID NO. RDC0016661
PLAN AND SECTIONS

DWG PH086888 | SHEET 6 OF 10

PLAN B

DRAFTER J.VU | DESIGNER J.VU | CHECKER J.NG | CADD PROJECT FILE NAME Las Flores Cyn Rd 79' N of MM 1.94.dgn | REVIEWED BY ____ DATE ____

DATE: $DATE$ TIME: $TIME$ FILE: $FILEL$

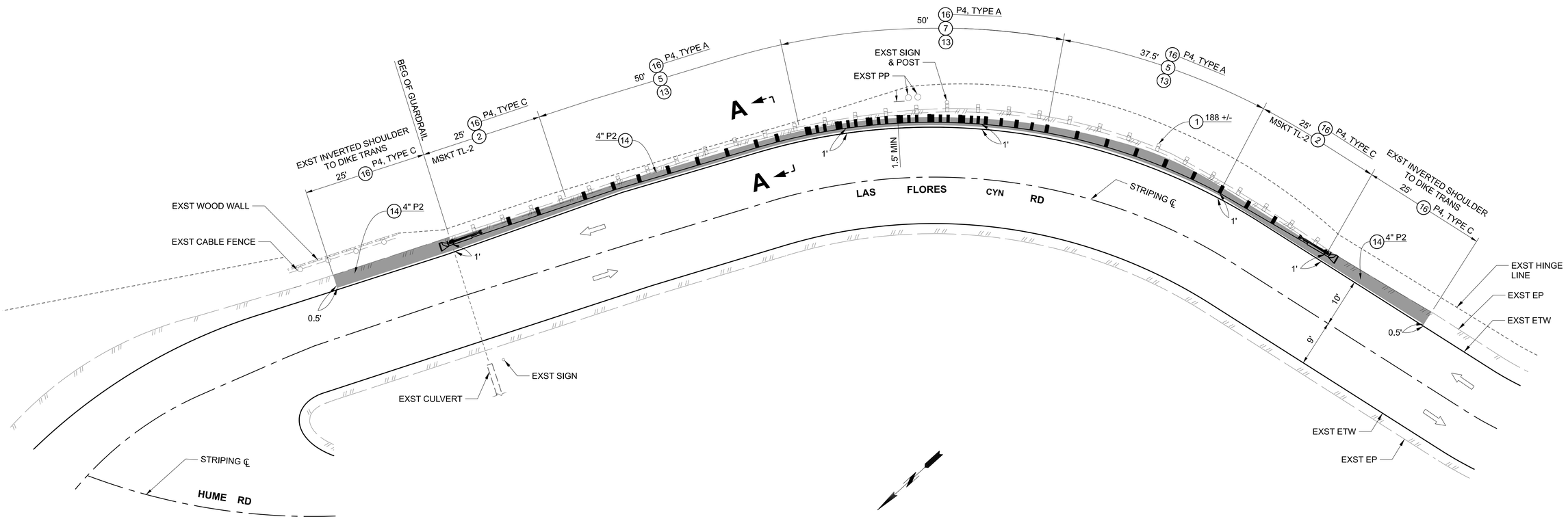

LAS FLORES CYN RD 100' S OF HUME RD

NOT TO SCALE

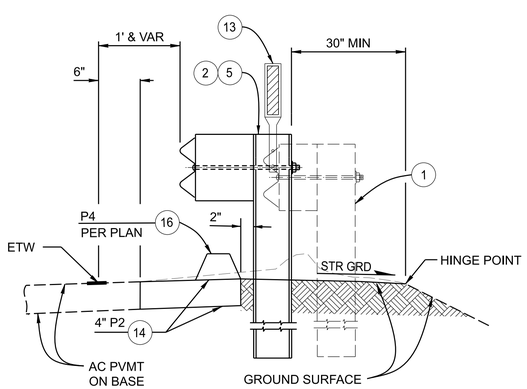

SECTION A-A

NOT TO SCALE

DRAFTER	DESIGNER	CHECKER	CADD PROJECT FILE NAME	REVIEWED BY	DATE
E. LIM	E. LIM	T. HO	Las Flores Cyn Rd 100' SO Hume Rd.dgn		

DATE	MARK	DESCRIPTION

REVISIONS

REGISTERED PROFESSIONAL ENGINEER THOMAS HO C 60649 CIVIL STATE OF CALIFORNIA

PROJECT ENGINEER 7/30/2025 DATE

LOS ANGELES COUNTY PUBLIC WORKS

GUARDRAIL REPLACEMENT

VARIOUS LOCATIONS RD336 OFF-SYSTEM (EM2501)
LAS FLORES CANYON ROAD, 100' S/O HUME ROAD
PROJECT ID NO. RDC0016661
PLAN & SECTION

DWG PH086888 SHEET 7 OF 10

PLAN B

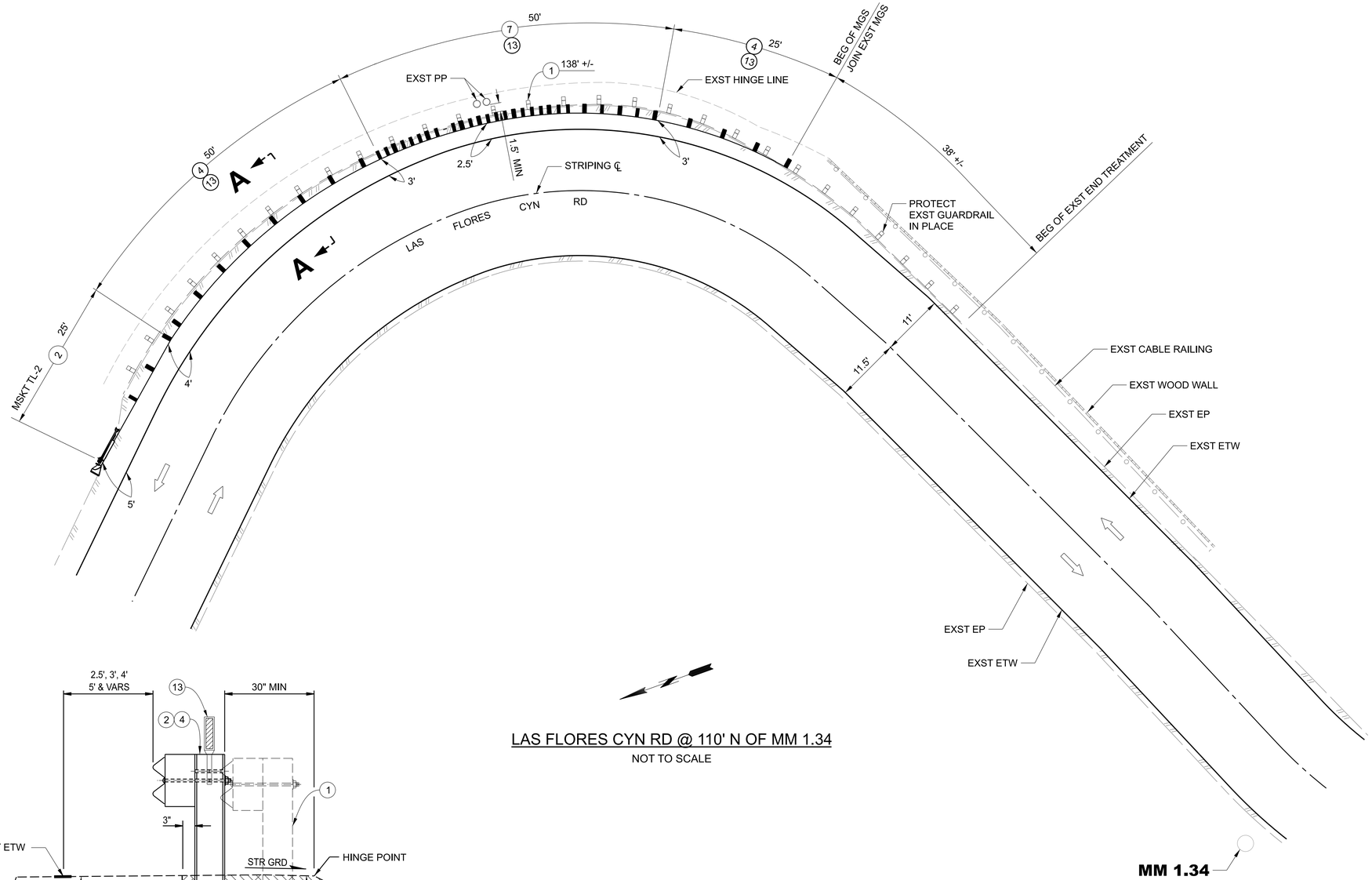

LAS FLORES CYN RD @ 110' N OF MM 1.34

NOT TO SCALE

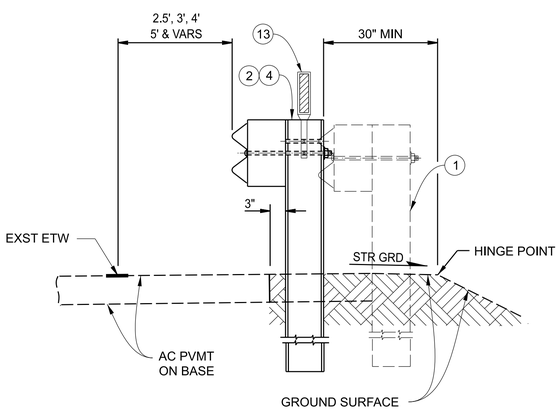

SECTION A-A

NOT TO SCALE

DRAFTER	DESIGNER	CHECKER	CADD PROJECT FILE NAME	REVIEWED BY	DATE
E. LIM	E. LIM	T. HO	Las Flores Cyn Rd 110' NO MM1.34.dgn		

DATE	MARK	DESCRIPTION

REVISIONS

REGISTERED PROFESSIONAL ENGINEER
THOMAS RO
C 60649
CIVIL
STATE OF CALIFORNIA

7/30/2025
PROJECT ENGINEER DATE

LOS ANGELES COUNTY PUBLIC WORKS

GUARDRAIL REPLACEMENT

VARIOUS LOCATIONS RD336 OFF-SYSTEM (EM2501)
LAS FLORES CANYON ROAD, 100' N/O MM 1.34
PROJECT ID NO. RDC0016661
PLAN & SECTION

DWG PH086888 SHEET 8 OF 10

PLAN B

DATE: $DATE$ TIME: $TIME$ FILE: $FILEL$

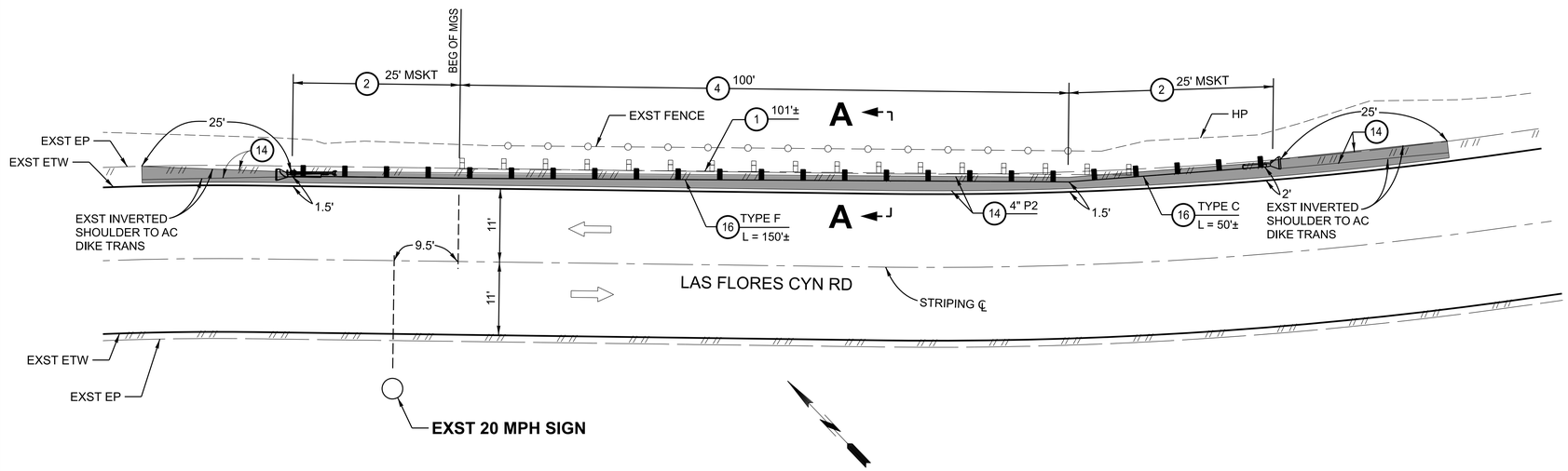

475' N/O 2117 LAS FLORES CYN RD

NOT TO SCALE

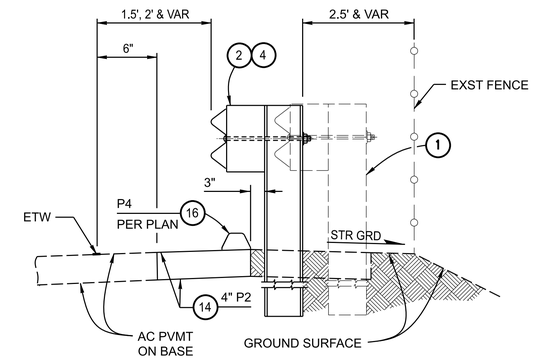

SECTION A-A

NOT TO SCALE

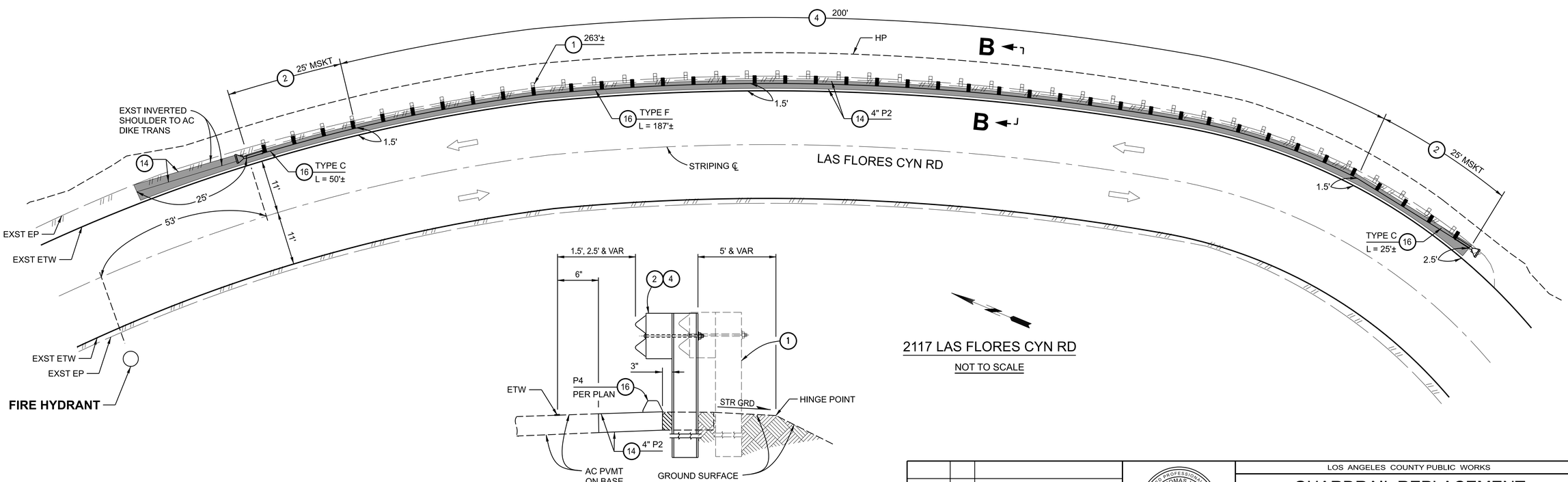

SECTION B-B

NOT TO SCALE

2117 LAS FLORES CYN RD

NOT TO SCALE

DATE	MARK	DESCRIPTION

REVISIONS

REGISTERED PROFESSIONAL ENGINEER THOMAS HO C 60649 CIVIL STATE OF CALIFORNIA

PROJECT ENGINEER 7/30/2025 DATE

LOS ANGELES COUNTY PUBLIC WORKS

GUARDRAIL REPLACEMENT

VARIOUS LOCATIONS RD336 OFF-SYSTEM (EM2501)
LAS FLORES CANYON ROAD, 475' N/O 2117 LAS FLORES CANYON ROAD AND 2117 LAS FLORES CANYON ROAD
PROJECT ID NO. RDC0016661

PLANS AND SECTIONS

DWG PH086888 | SHEET 9 OF 10

DRAFTER J. DOAN | DESIGNER J. DOAN | CHECKER T. HO | CADD PROJECT FILE NAME Las Flores Cyn Rd Guardrail.dgn | REVIEWED BY | DATE

PLAN B

DATE: $DATE$ TIME: $TIME$ FILE: $FILEL$

SECTION A-A
NOT TO SCALE

SECTION B-B
NOT TO SCALE

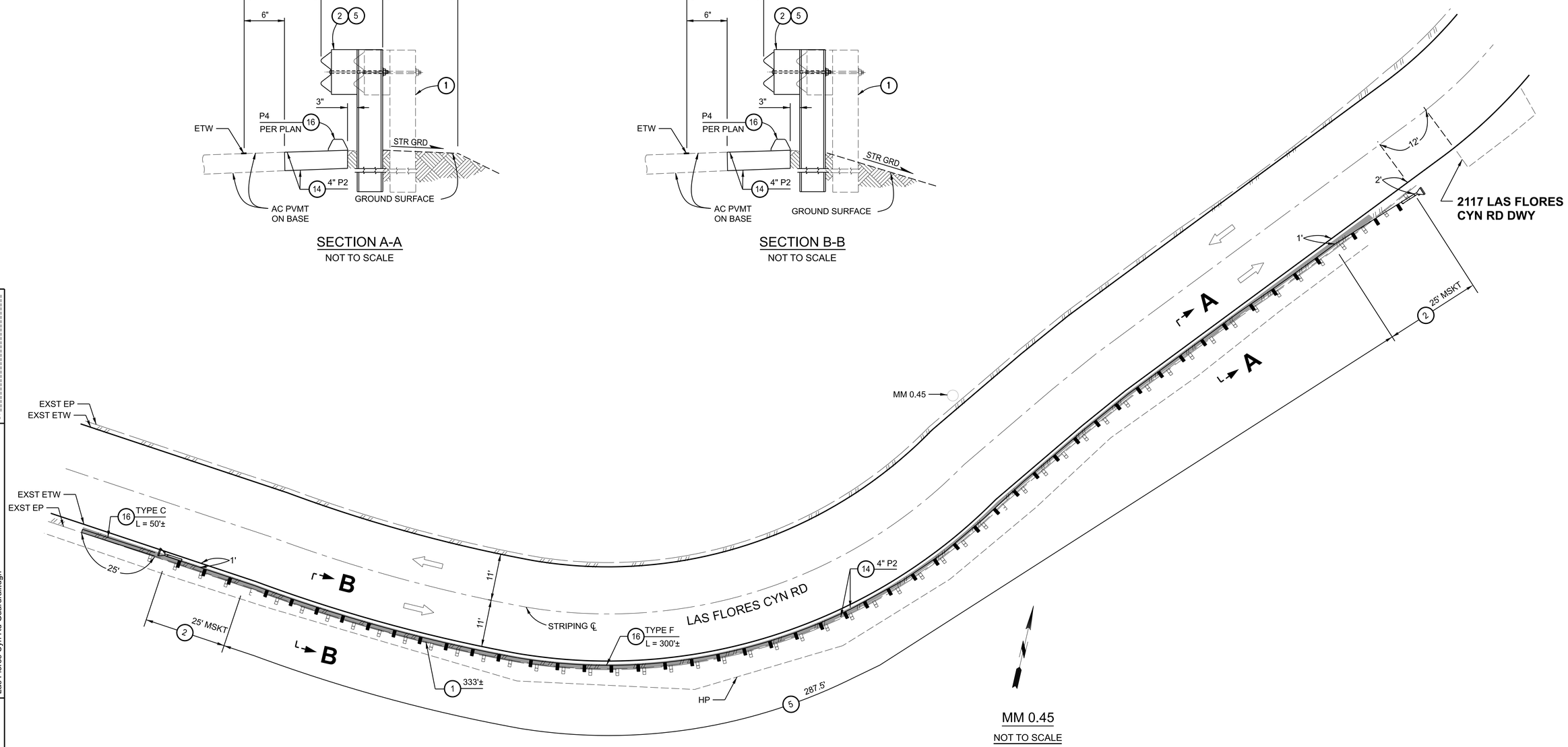

MM 0.45
NOT TO SCALE

DATE	MARK	DESCRIPTION

REVISIONS

REGISTERED PROFESSIONAL ENGINEER
THOMAS HO
C 60649
CIVIL
STATE OF CALIFORNIA

PROJECT ENGINEER 7/30/2025 DATE

LOS ANGELES COUNTY PUBLIC WORKS

GUARDRAIL REPLACEMENT

VARIOUS LOCATIONS RD336 OFF-SYSTEM (EM2501)
LAS FLORES CANYON ROAD AT MM 0.45
PROJECT ID NO. RDC0016661
PLAN AND SECTIONS

DWG PH086888 SHEET 10 OF 10

PLAN B

DRAFTER J. DOAN
DESIGNER J. DOAN
CHECKER T. HO
CADD PROJECT FILE NAME Las Flores Cyn Rd Guardrail.dgn
REVIEWED BY _____ DATE

DATE: $DATE$ TIME: $TIME$ FILE: $FILEL$

LOS ANGELES COUNTY PUBLIC WORKS

GUARDRAIL REPLACEMENT
VARIOUS LOCATIONS RD336
OFF-SYSTEM (EM2501)

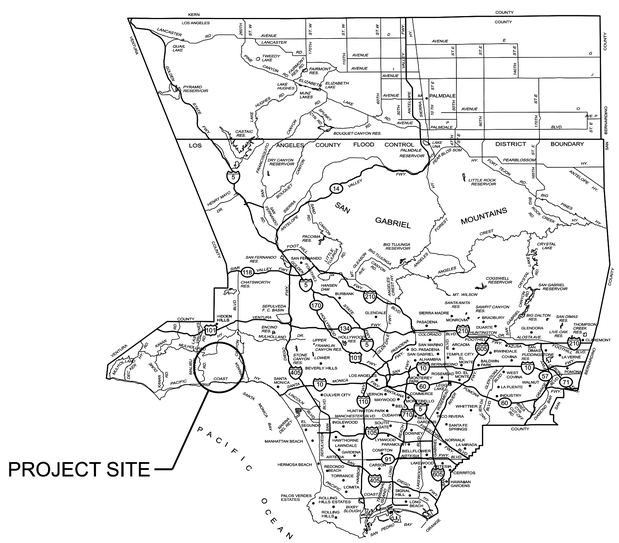

LOCATION MAP
NOT TO SCALE

INDEX TO PROJECT PLANS

SHEET NUMBER	DESCRIPTION
1	TITLE SHEET
2	NOTES, REFERENCES, TYPICAL SECTIONS
3-6	PLANS

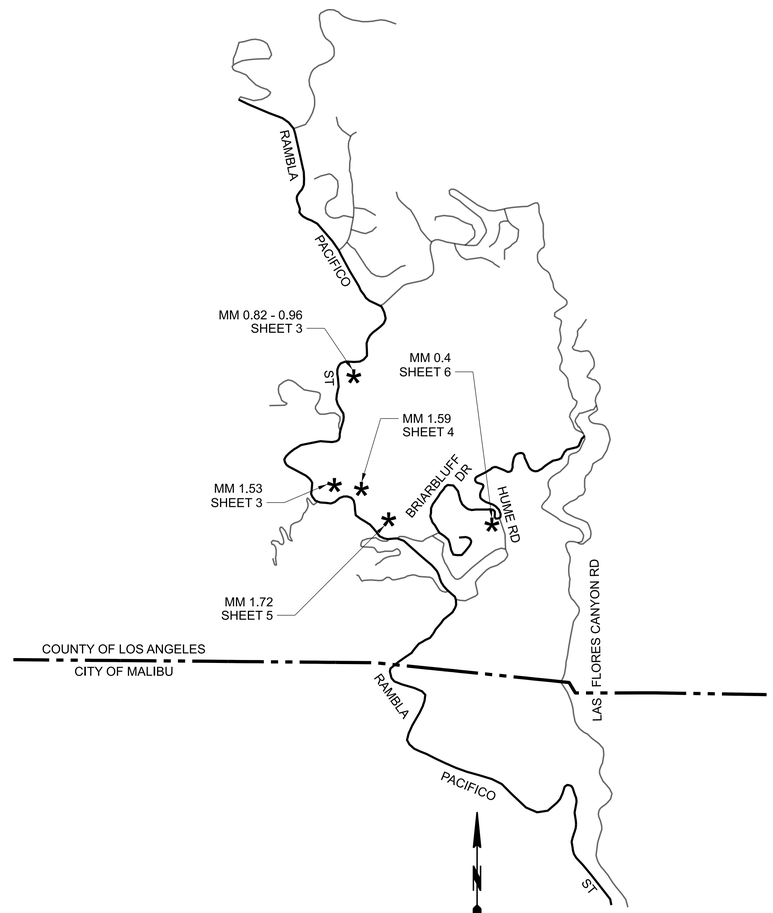

KEY MAP
NOT TO SCALE

DRAFTER	DESIGNER	CHECKER	CADD PROJECT FILE NAME
M. PATEL	S. BARBOZA	B. FUNG	RDC0016661 - GUARDRAIL REPLACEMENT.dgn

DATE	MARK	DESCRIPTION

REVISIONS

REGISTERED PROFESSIONAL ENGINEER SERGIO BARBOZA C 72133 CIVIL STATE OF CALIFORNIA

Sergio Barboza 7-29-25
PROJECT ENGINEER DATE

LOS ANGELES COUNTY PUBLIC WORKS

GUARDRAIL REPLACEMENT
VARIOUS LOCATIONS RD336 OFF-SYSTEM (EM2501)
RAMBLA PACIFICO ST, ET AL.
PROJECT ID NO. RDC0016661
TITLE SHEET

DWG PH086888 SHEET 1 OF 6

PLAN C

DATE: 7/29/2025 TIME: 9:54:53 AM FILE: pw://pwedmsprod01.dpw.co.la.ca.us:PW_INT2/Documents/DEPARTMENT PROJECTS (PIW)/DES/DES0003842 - 2025 Palisades File - Guardrail Repair/DES Guardrail/1-CAD/RDC0016661 - GUARDRAIL REPLACEMENT.dgn

CONSTRUCTION LEGEND

1. REMOVE & DISPOSE OF EXISTING GUARDRAIL (INCLUDING POSTS)
2. IN-LINE TERMINAL SYSTEM (TL2)
4. MIDWEST GUARDRAIL SYSTEM (STEEL POST W/ PLASTIC BLOCK)
5. MIDWEST GUARDRAIL SYSTEM (STEEL POST W/ PLASTIC BLOCK) (8' POST)
7. STRENGTHENED MIDWEST GUARDRAIL SYSTEM (CALTRANS STD PLAN A77R4)
9. MIDWEST GUARDRAIL SYSTEM BURIED POST END ANCHOR (TYPE B-F)
13. DELINEATOR PER CALTRANS STD PLAN A77N4
14. AC PAVEMENT
15. REMOVE EXISTING INVERTED SHOULDER
16. HMA DIKE (TYPE PER PLAN)

STANDARD PLANS

STATE OF CALIFORNIA DEPARTMENT OF TRANSPORTATION
STANDARD PLANS (2024 EDITION)

A77L2	MIDWEST GUARDRAIL SYSTEM STANDARD RAILING SECTION
A77M1	MIDWEST GUARDRAIL SYSTEM STANDARD HARDWARE
A77N3	MIDWEST GUARDRAIL SYSTEM TYPICAL LINE POST EMBEDMENT AND HINGE POINT OFFSET DETAILS
A77N4	MIDWEST GUARDRAIL SYSTEM TYPICAL RAILING DELINEATION AND DIKE POSITIONING DETAILS
A77P1	MIDWEST GUARDRAIL SYSTEM TYPICAL LAYOUTS FOR EMBANKMENTS
A77P2	MIDWEST GUARDRAIL SYSTEM TYPICAL LAYOUTS FOR EMBANKMENTS
A77R4	MIDWEST GUARDRAIL SYSTEM TYPICAL LAYOUTS FOR ROADSIDE FIXED OBJECTS
A77T2	MIDWEST GUARDRAIL SYSTEM BURIED POST END ANCHOR (TYPE B-F)
A79B1	TRANSITION RAILING (TYPE AGT) TO BRIDGE RAILINGS WITHOUT SIDEWALKS
A87B	HOT MIX ASPHALT DIKES
1 A77N5	MINOR CONCRETE VEGETATION CONTROL GUARDRAIL SYSTEM
A77N5A	MINOR CONCRETE VEGETATION CONTROL GUARDRAIL SYSTEM NARROW VEGETATION CONTROL INSTALLATION
A77N6	MINOR CONCRETE VEGETATION CONTROL GUARDRAIL SYSTEM FOR TERMINAL SYSTEM END TREATMENTS
A77N7	MINOR CONCRETE VEGETATION CONTROL GUARDRAIL SYSTEM AT STRUCTURE APPROACH
A77N8	MINOR CONCRETE VEGETATION CONTROL GUARDRAIL SYSTEM AT FIXED OBJECT
A77N9	MINOR CONCRETE VEGETATION CONTROL GUARDRAIL SYSTEM AT FIXED OBJECT
A77N10	MINOR CONCRETE VEGETATION CONTROL GUARDRAIL SYSTEM AT FIXED OBJECT
A77N11	MINOR CONCRETE VEGETATION CONTROL GUARDRAIL SYSTEM MISCELLANEOUS DETAILS

GUARDRAIL NOTES

1. ALL STD GUARDRAIL INSTALLATION SHALL BE STEEL POSTS WITH NOTCHED PLASTIC BLOCKS.
2. ALL GUARDRAIL LENGTH AND LOCATION ARE MEASURED ALONG THE FACE OF THE RAILING, UNLESS OTHERWISE SHOWN ON THE PLANS AND DETAILS OR AS DIRECTED BY THE ENGINEER.
3. EACH TERMINAL SYSTEM INSTALLED MUST BE IDENTIFIED BY PAINTING THE TYPE OF THE TERMINAL SYSTEM IN NEAT BLACK LETTERS AND FIGURES 2 INCHES HIGH ON THE BACKSIDE OF THE RAIL ELEMENT BETWEEN SYSTEM POST NUMBERS 4 AND 5.
4. FOR INSTALLATION OF TERMINAL SYSTEMS, BLACK AND YELLOW RETROREFLECTIVE STRIPED SHEETING SHALL BE ADHERED TO THE APPROACH END (S) OF THE GUARDRAIL. THE STRIPES SHALL BE SLOPED DOWN AT AN ANGLE OF 45 DEGREES TOWARDS THE SIDE OF THE ROADWAY ON WHICH TRAFFIC IS TO PASS THE OBSTRUCTION BEING PROTECTED. THE SHEETING SHALL BE CONSISTENT WITH THE DESIGN PATTERN, COLORS, AND DIRECTION OF A TYPE "P(CA)" OBJECT MARKER PER CALIFORNIA MANUAL OF UNIFORM TRAFFIC CONTROL DEVICES (MUTCD) 2014 EDITION, SECTION 2C.65.
5. THE PROPOSED TERMINAL SYSTEM SHALL BE INSTALLED IN A STRAIGHT FLARE OVER THE ENTIRE LENGTH AND SHOULD NOT BE INSTALLED ON A PARABOLIC CURVE.
6. IN-LINE TERMINAL SYSTEMS MUST USE STEEL POSTS AND PLASTIC BLOCKS, AND INSTALLED PER MANUFACTURER'S RECOMMENDATIONS.
7. DELINEATORS MUST BE POSITIONED 25 FEET FROM THE EDGE OF THE END TREATMENT AND SPACED 25 FEET APART THEREAFTER.
8. (1) CONSTRUCT MINOR CONCRETE VEGETATION CONTROL AT ALL LOCATIONS PER CALTRANS STANDARD PLANS A77N5 THROUGH A77N11 EXCEPT WHERE MINOR CONCRETE & BLOCK-OUT MATERIAL ARE ALREADY SHOWN ON PLAN.

AC PAVEMENT CLASS AND GRADE LEGEND

P2 C2-PG 64-10 P4 D2-PG 64-10

NOTE:

(#) PER PLAN
* LOCATION AND TYPE PER PLAN
⇨ INDICATES DIRECTION OF TRAFFIC

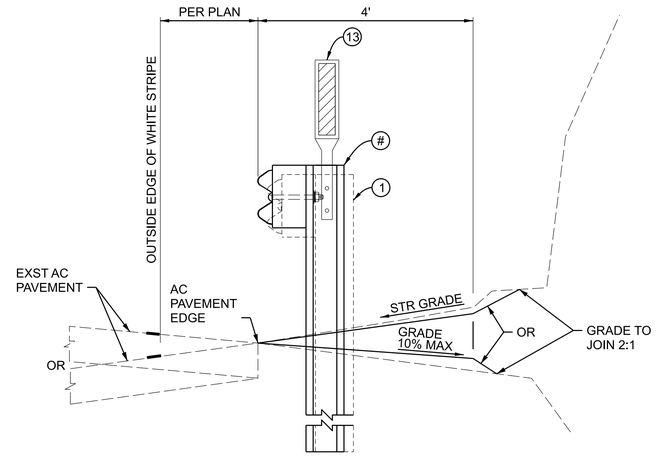

SECTION A
NOT TO SCALE

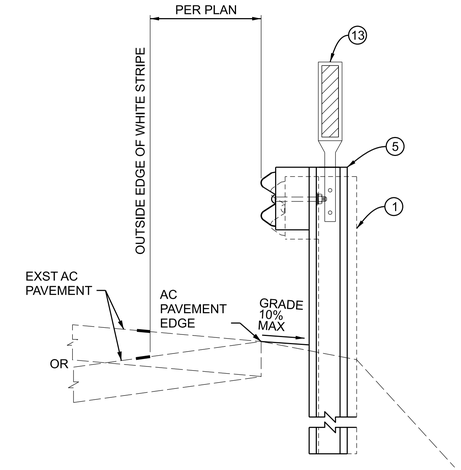

SECTION B
NOT TO SCALE

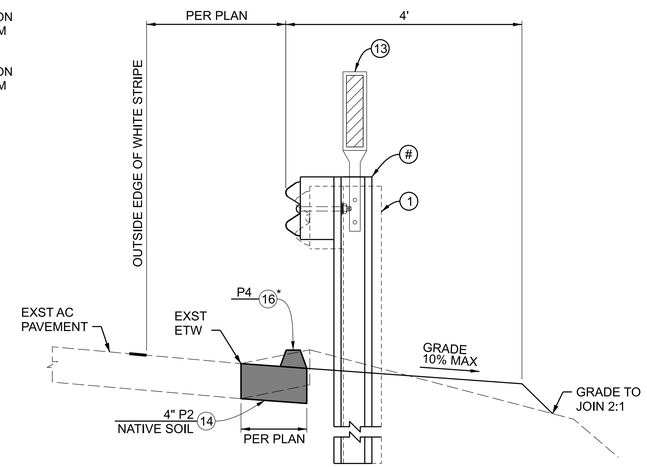

SECTION C
NOT TO SCALE

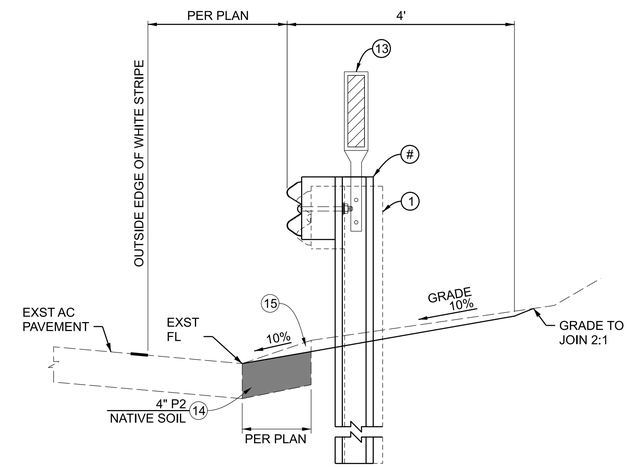

SECTION D
NOT TO SCALE

ABBREVIATIONS

ABBREVIATION	WORD OR WORDS
AC	ASPHALT CONCRETE
CL	CENTER LINE
EP	EDGE OF PAVEMENT
ETW	EDGE OF TRAVEL WAY
EXST	EXISTING
FL	FLOW LINE
INV	INVERTED
LACPW	LOS ANGELES COUNTY PUBLIC WORKS
MAX	MAXIMUM
MIN	MINIMUM
SPPWC	STANDARD PLANS FOR PUBLIC WORKS CONSTRUCTION
STD	STANDARD
STR	STRAIGHT
PP	POWER POLE
PVMT	PAVEMENT

DATE	MARK	DESCRIPTION
11/3/2025	1	ADDED MINOR CONCRETE VEGETATION CONTROL

REVISIONS

REGISTERED PROFESSIONAL ENGINEER SERGIO BARBOZA C 72133 CIVIL STATE OF CALIFORNIA
PROJECT ENGINEER 7-29-25 DATE

LOS ANGELES COUNTY PUBLIC WORKS

GUARDRAIL REPLACEMENT

VARIOUS LOCATIONS RD336 OFF-SYSTEM (EM2501)
RAMBLA PACIFICO ST, ET AL.
PROJECT ID NO. RDC0016661
NOTES, REFERENCES, TYPICAL SECTIONS

DWG PH086888 SHEET 2 OF 6

DRAFTER M. PATEL | DESIGNER S. BARBOZA | CHECKER B. FUNG | CADD PROJECT FILE NAME RDC0016661 - GUARDRAIL REPLACEMENT.dgn | REVIEWED BY | DATE 7/29/25

PLAN C

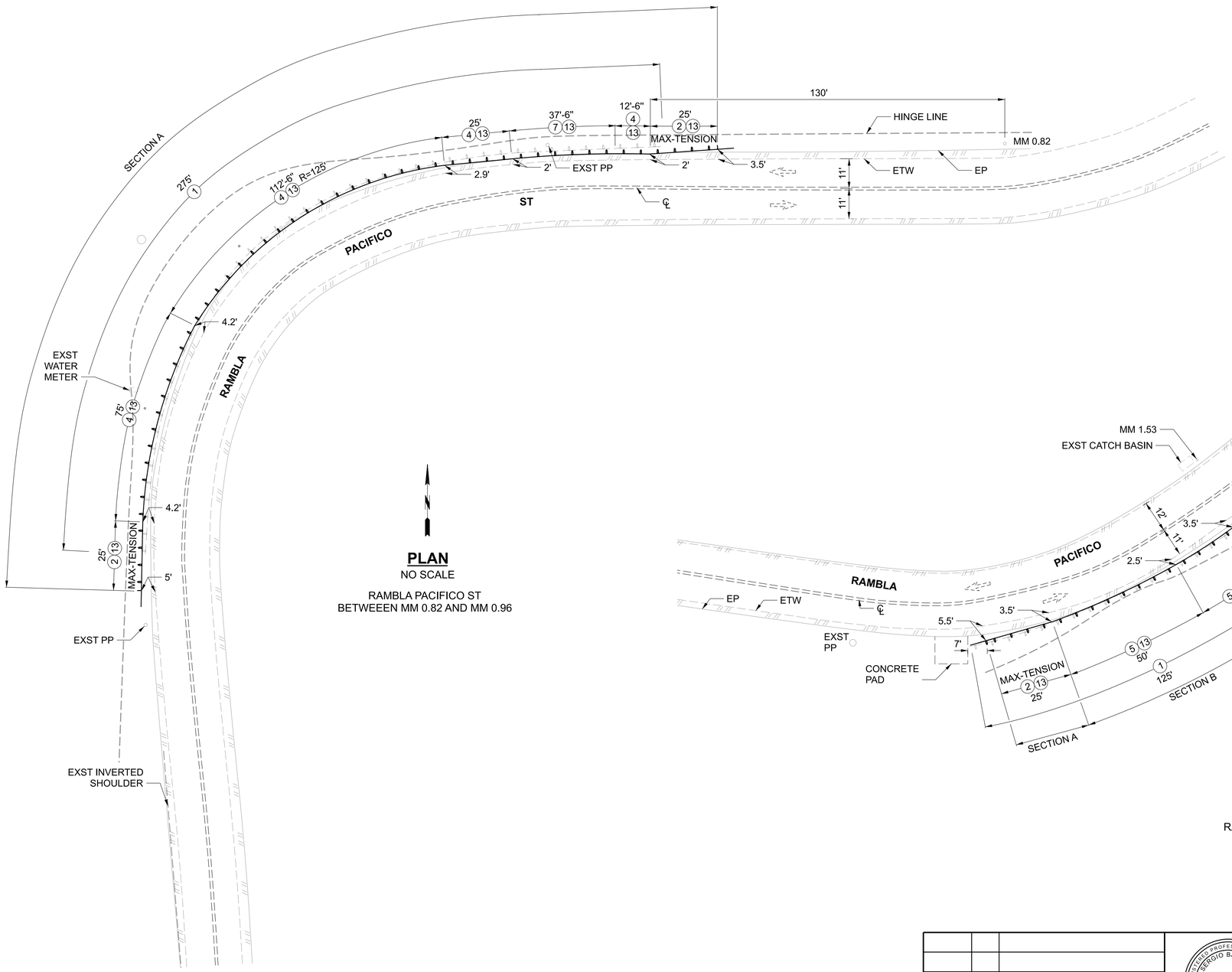

PLAN
NO SCALE

RAMBLA PACIFICO ST
BETWEEEN MM 0.82 AND MM 0.96

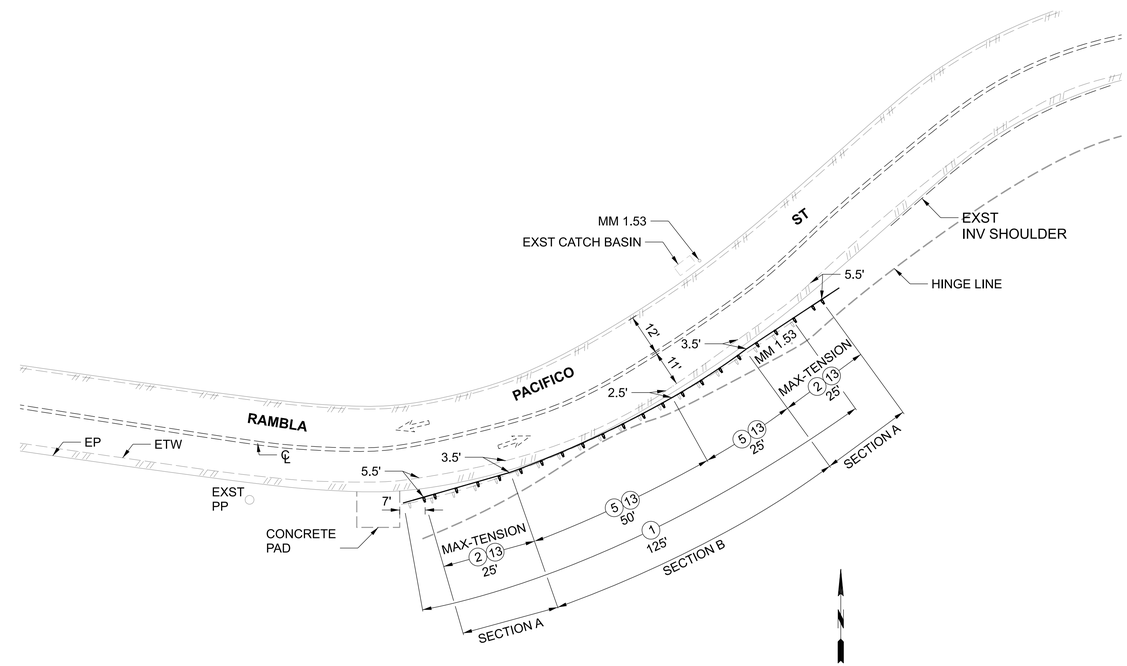

PLAN
NO SCALE

RAMBLA PACIFICO ST - MM 1.53

DATE	MARK	DESCRIPTION

REVISIONS

REGISTERED PROFESSIONAL ENGINEER SERGIO BARBOZA C 72133 CIVIL STATE OF CALIFORNIA

PROJECT ENGINEER 7-29-25 DATE

LOS ANGELES COUNTY PUBLIC WORKS

GUARDRAIL REPLACEMENT

VARIOUS LOCATIONS RD336 OFF-SYSTEM (EM2501)
RAMBLA PACIFICO ST
BETWEEN MM 0.82 AND MM 0.96, AND MM 1.53
PROJECT ID NO. RDC0016661
PLAN

DWG PH086888 | SHEET 3 OF 6

PLAN C

DRAFTER S. ATTAL | DESIGNER S. BARBOZA | CHECKER B. FUNG | CADD PROJECT FILE NAME Rambla Pacifico Between MM 0.82 and MM 0.96.dgn | REVIEWED BY | DATE 7/29/25

DATE: 7/29/2025 TIME: 10:03:04 AM FILE: pw://pwedmsprod01.dpw.co.la.ca.us:PW_INT2/Documents/DEPARTMENT PROJECTS (PIW)/DES/DES0003842 - 2025 Palisades File - Guardrail Repair/DES Guardrail/TD1/Rambla Pacifico St - Between MM 0.82 and MM 0.96/4-CAD/Rambla Pacifico Between MM 0.82 and MM 0.96.dgn

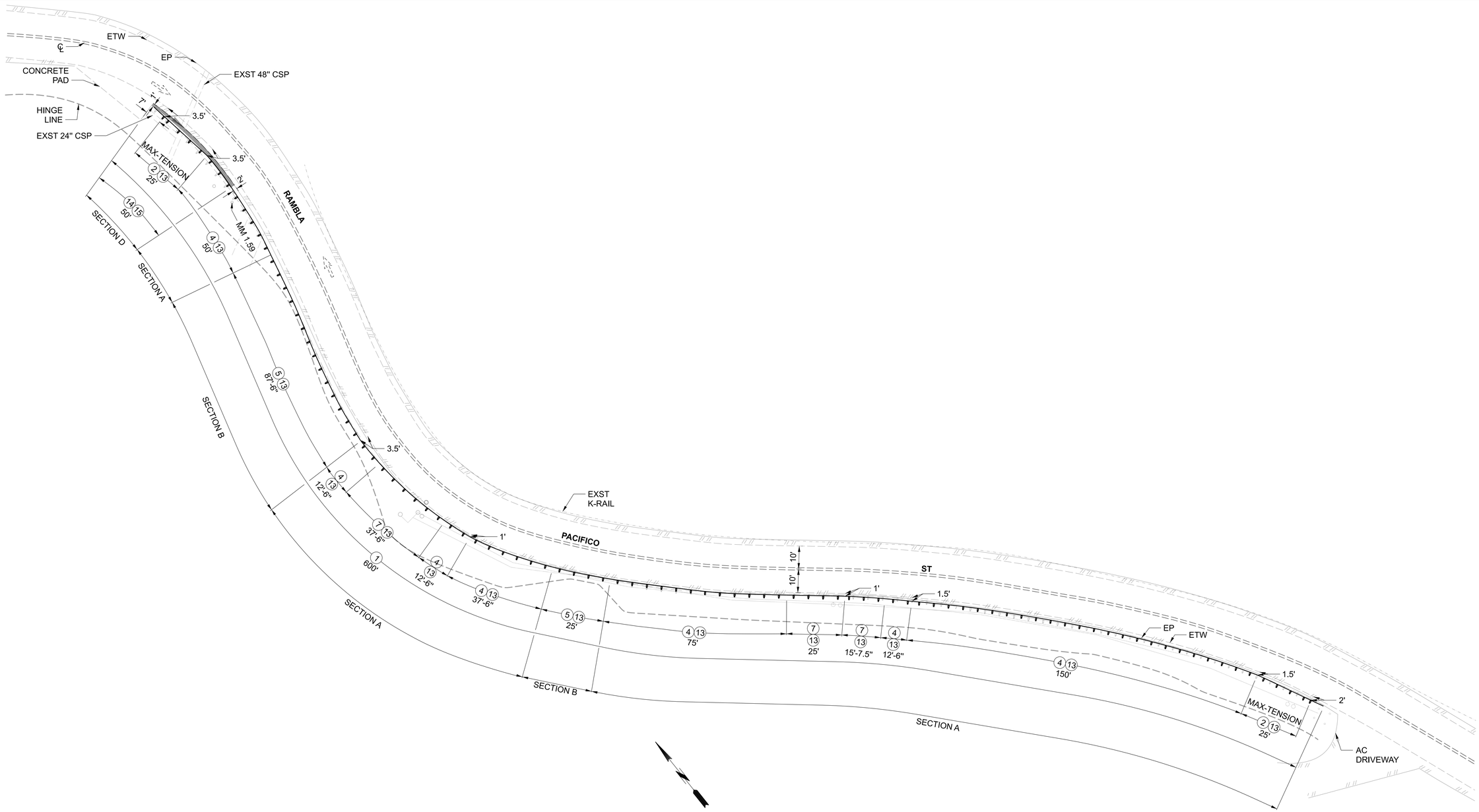

PLAN

NO SCALE

RAMBLA PACIFICO ST - MM 1.59

DATE	MARK	DESCRIPTION

REVISIONS

REGISTERED PROFESSIONAL ENGINEER SERGIO BARBOZA C 72133 CIVIL STATE OF CALIFORNIA

PROJECT ENGINEER 7-29-25 DATE

LOS ANGELES COUNTY PUBLIC WORKS

GUARDRAIL REPLACEMENT

VARIOUS LOCATIONS RD336 OFF-SYSTEM (EM2501)

RAMBLA PACIFICO ST AT MM 1.59

PROJECT ID NO. RDC0016661

PLAN

DWG PH086888 SHEET 4 OF 6

DRAFTER S. ATTAL | DESIGNER S. BARBOZA | CHECKER B. FUNG | CADD PROJECT FILE NAME Rambla Pacifico at MM 1.59.dgn | REVIEWED BY | DATE 7/29/25

PLAN C

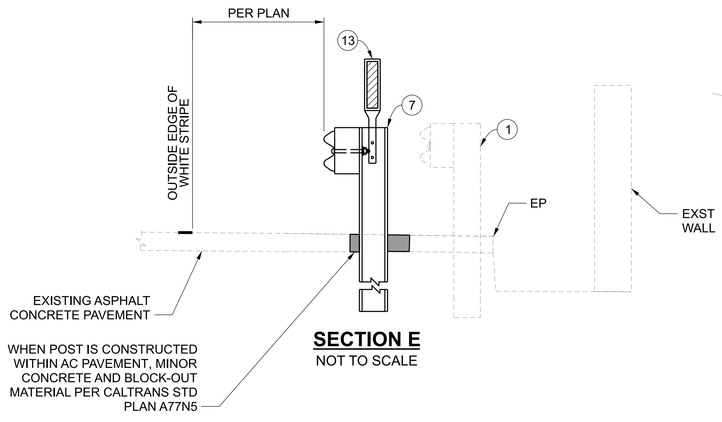

SECTION E
NOT TO SCALE

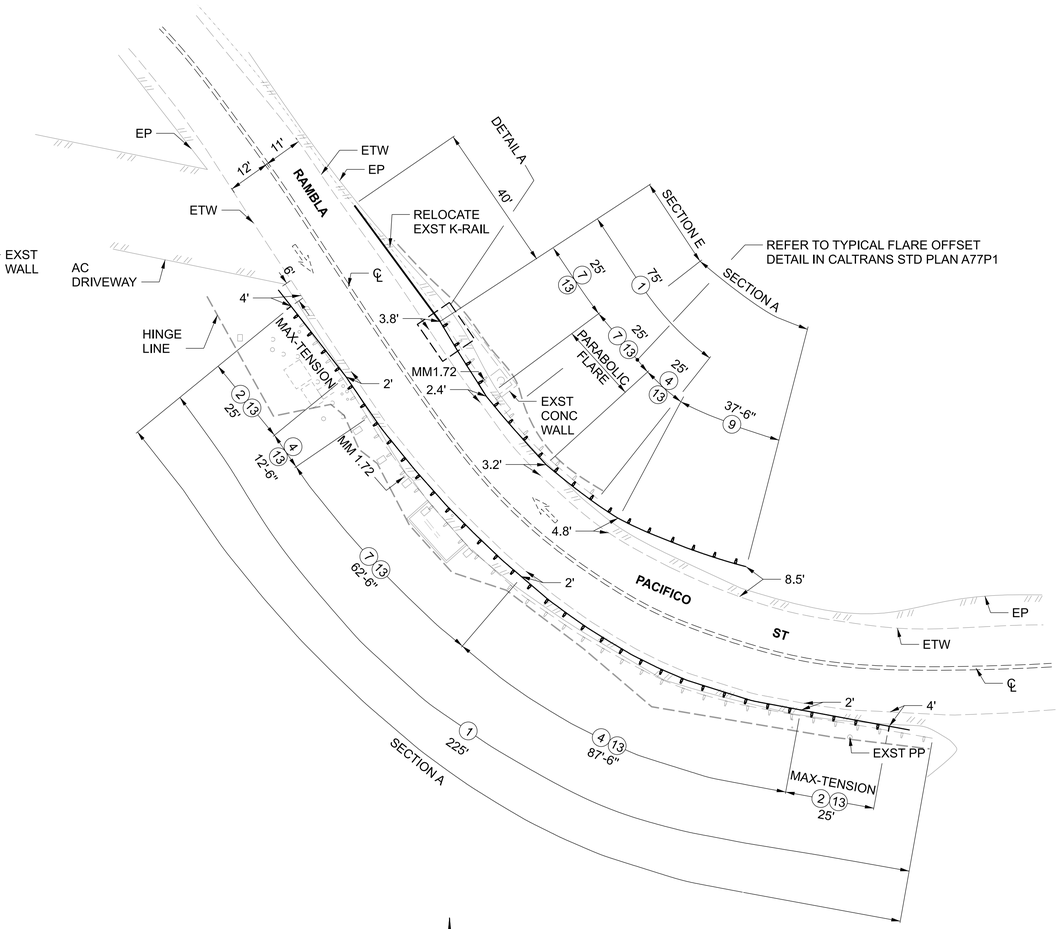

PLAN
NO SCALE

RAMBLA PACIFICO ST - MM 1.72 N and S

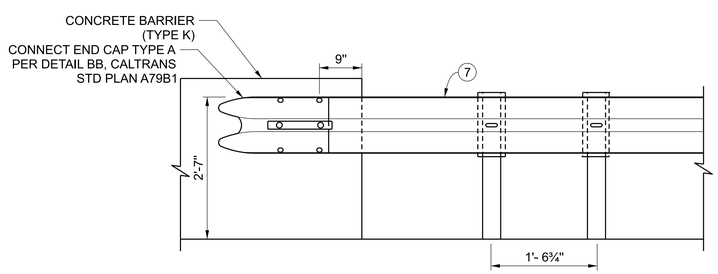

DETAIL A
NOT TO SCALE

DATE	MARK	DESCRIPTION

REVISIONS

REGISTERED PROFESSIONAL ENGINEER SERGIO BARBOZA C 72133 CIVIL STATE OF CALIFORNIA

PROJECT ENGINEER 7-29-25 DATE

LOS ANGELES COUNTY PUBLIC WORKS

GUARDRAIL REPLACEMENT

VARIOUS LOCATIONS RD336 OFF-SYSTEM (EM2501)
RAMBLA PACIFICO ST AT MM 1.72 N AND S
PROJECT ID NO. RDC0016661
PLAN

DWG PH086888 | SHEET 5 OF 6

DRAFTER S. ATTAL | DESIGNER S. BARBOZA | CHECKER B. FUNG | CADD PROJECT FILE NAME Rambla Pacifico at MM 1.72 N.dgn | REVIEWED BY | DATE 7/29/25

PLAN C

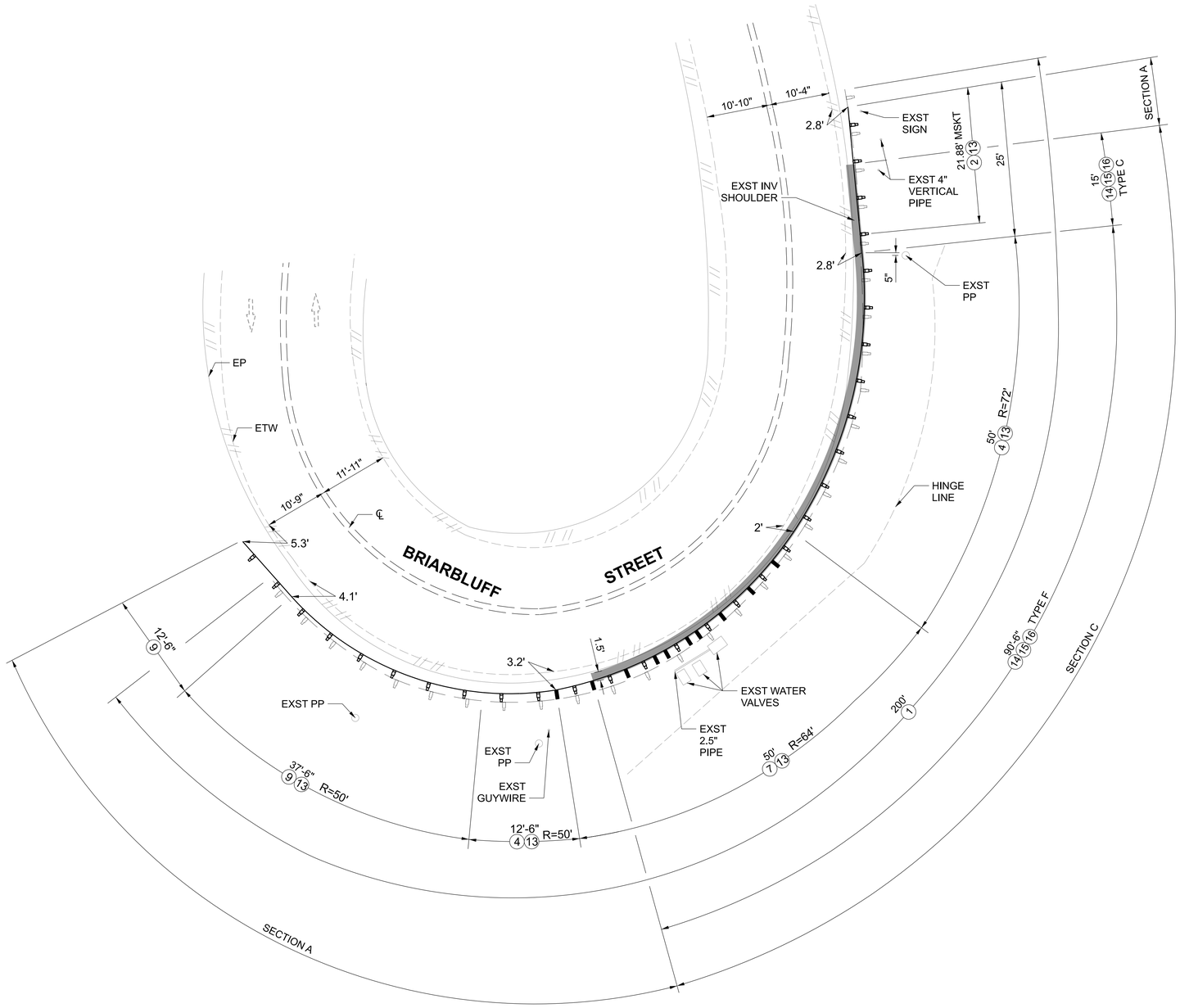

PLAN

NO SCALE

BRIARBLUFF STREET MM 0.4

DATE	MARK	DESCRIPTION

REVISIONS

REGISTERED PROFESSIONAL ENGINEER SERGIO BARBOZA C 72133 CIVIL STATE OF CALIFORNIA

Sergio Barboza 7-29-25
PROJECT ENGINEER DATE

LOS ANGELES COUNTY PUBLIC WORKS

GUARDRAIL REPLACEMENT

VARIOUS LOCATIONS RD336 OFF-SYSTEM (EM2501)
BRIARBLUFF ST AT MM 0.4
PROJECT ID NO. RDC0016661
PLAN

DWG PH086888 | SHEET 6 OF 6

PLAN C

DRAFTER M. PATEL | DESIGNER S. BARBOZA | CHECKER B. FUNG | CADD PROJECT FILE NAME Briarbluff Street MM. 0.4.dgn | REVIEWED BY | DATE 7/29/25

DATE: 7/29/2025 TIME: 9:58:25 AM FILE: pw://pwedmsprod01.dpw.co.la.ca.us:PW_INT2/Documents/DEPARTMENT PROJECTS (PIW)/DES/DES0003842 - 2025 Palisades File - Guardrail Repair/DES Guardrail/TD1/Briarbluff Dr - MM 0.40 Hume Bend/4-CAD/Briarbluff Street MM. 0.4.dgn

LOS ANGELES COUNTY PUBLIC WORKS

GUARDRAIL REPLACEMENT
VARIOUS LOCATIONS RD336
OFF-SYSTEM (EM2501)

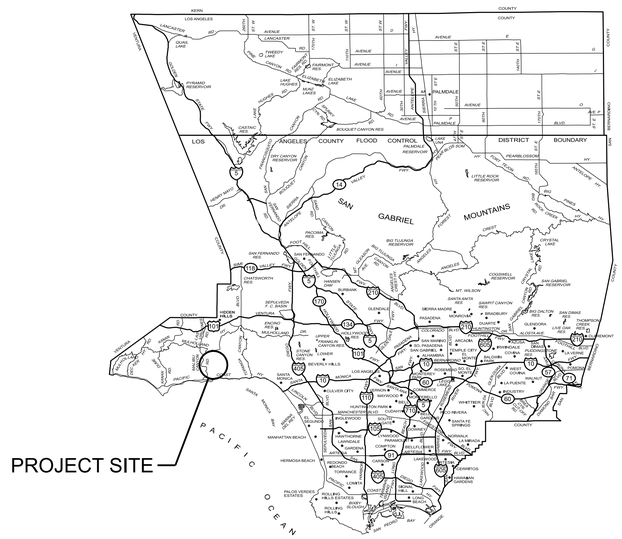

LOCATION MAP
NOT TO SCALE

INDEX TO PROJECT PLANS

SHEET NUMBER	DESCRIPTION
1	TITLE SHEET
2	NOTES AND REFERENCES
3	PLAN

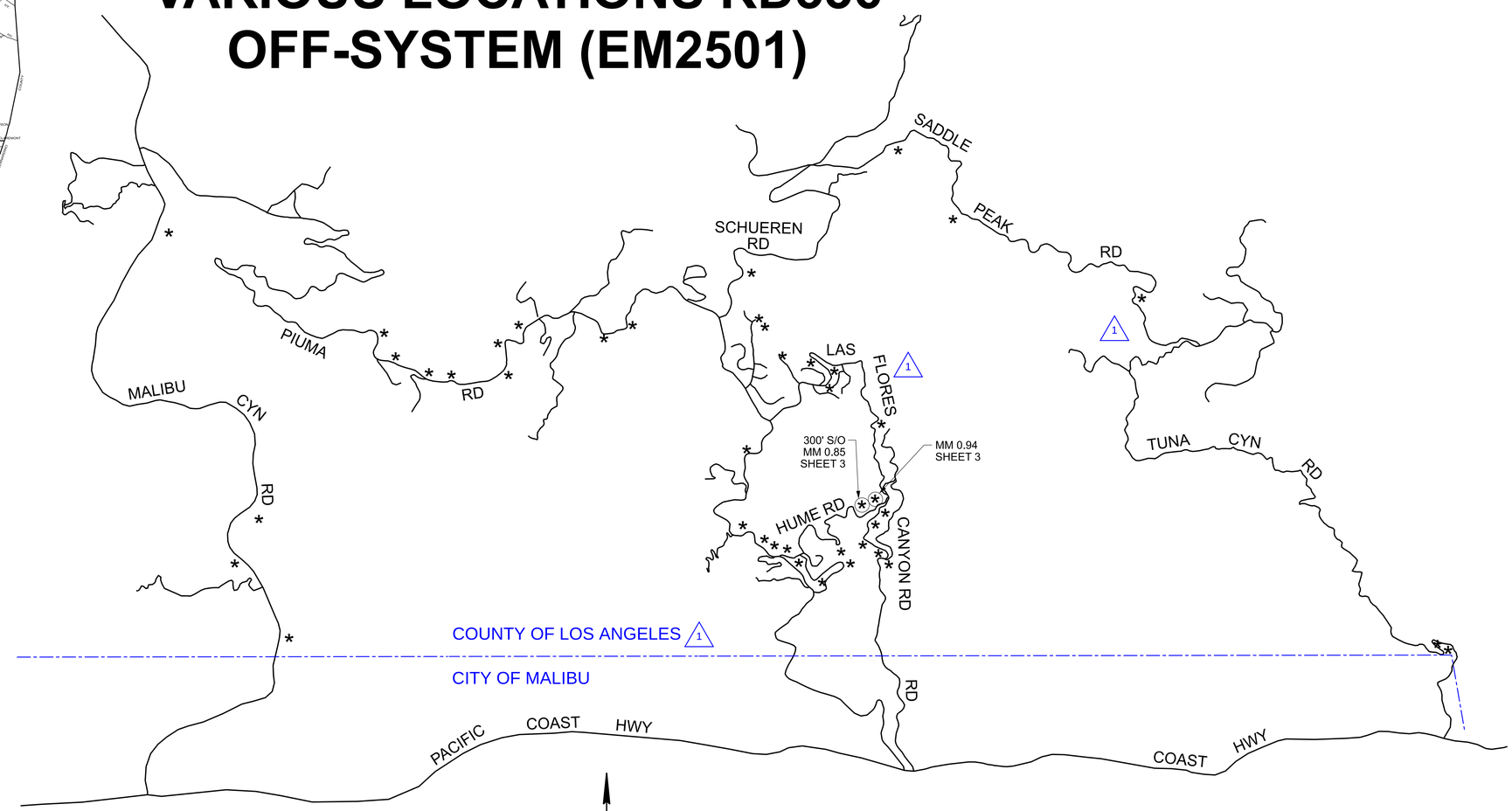

KEY MAP
NOT TO SCALE

DRAFTER	DESIGNER	CHECKER	CADD PROJECT FILE NAME
C. HUDSON	C. HUDSON	J. MELGAR	Palisades Fire CH.dgn

DATE	MARK	DESCRIPTION
7/29/25	1	UPDATED KEY MAP AND SH #

REVISIONS

REGISTERED PROFESSIONAL ENGINEER CHRISTOPHER HUDSON C 77019 CIVIL STATE OF CALIFORNIA

PROJECT ENGINEER 3/7/2025 DATE

LOS ANGELES COUNTY PUBLIC WORKS

GUARDRAIL REPLACEMENT
VARIOUS LOCATIONS RD336 OFF-SYSTEM (EM2501)
HUME RD LOCATIONS
PROJECT ID NO. RDC0016661
TITLE SHEET

DWG PH086888 SHEET 1 OF 3

PLAN D

DATE: 4/16/2025 TIME: 5:09:44 PM FILE: pw://pwedmsprod01.dpw.co.la.ca.us:PW_INT2/Documents/DEPARTMENT PROJECTS (PIW)/DES/DES0003842 - 2025 Palisades File - Guardrail Repair/DES Guardrail/Support/CAD/Palisades Fire CH.dgn

CONSTRUCTION LEGEND

1. REMOVE & DISPOSE EXISTING METAL BEAM GUARDRAIL
2. MIDWEST GUARDRAIL SYSTEM STANDARD RAILING SECTION PER CALTRANS STD PLAN A77L2 (STEEL POST WITH RECYCLED PLASTIC BLOCK)
3. TERMINAL SYSTEM END TREATMENT (TYPE-MSKT-TL3)
4. MIDWEST GUARDRAIL SYSTEM BURIED POST END ANCHOR (TYPE B-F) PER CALTRANS STD PLAN A77T2
5. DELINEATOR PER CALTRANS STD PLAN A77N4
6. ASPHALT CONCRETE PAVEMENT P2 (C2- PG 64-10) 1
7. HOT MIX ASPHALT DIKES PER CALTRANS STD PLAN A87B TYPE PER PLAN
8. SHOULDER GRADING
9. MIDWEST GUARDRAIL SYSTEM END ANCHOR ASSEMBLY (TYPE SFT-M) PER CALTRANS STD PLAN A77S1

STANDARD PLANS

STATE OF CALIFORNIA DEPARTMENT OF TRANSPORTATION
STANDARD PLANS (2024 EDITION)

A77L2	MIDWEST GUARDRAIL SYSTEM STANDARD RAILING SECTION (STEEL POST WITH RECYCLED PLASTIC BLOCK)
A77M1	MIDWEST GUARDRAIL SYSTEM STANDARD HARDWARE
A77N3	MIDWEST GUARDRAIL SYSTEM TYPICAL LINE POST EMBEDMENT AND HINGE POINT OFFSET DETAILS
A77N4	MIDWEST GUARDRAIL SYSTEM TYPICAL RAILING DELINEATION AND DIKE POSITIONING DETAILS
A77P1	MIDWEST GUARDRAIL SYSTEM TYPICAL LAYOUT FOR EMBANKMENTS
A77P6	MIDWEST GUARDRAIL SYSTEM TYPICAL LAYOUT FOR EMBANKMENTS
A77S1	MIDWEST GUARDRAIL SYSTEM END ANCHOR ASSEMBLY (TYPE SFT-M)
A77T2	MIDWEST GUARDRAIL SYSTEM BURIED POST END ANCHOR (TYPE B-F)
A87B	HOT MIX ASPHALT DIKES
2 A77N5	MINOR CONCRETE VEGETATION CONTROL GUARDRAIL SYSTEM
A77N5A	MINOR CONCRETE VEGETATION CONTROL GUARDRAIL SYSTEM NARROW VEGETATION CONTROL INSTALLATION
A77N6	MINOR CONCRETE VEGETATION CONTROL GUARDRAIL SYSTEM FOR TERMINAL SYSTEM END TREATMENTS
A77N7	MINOR CONCRETE VEGETATION CONTROL GUARDRAIL SYSTEM AT STRUCTURE APPROACH
A77N8	MINOR CONCRETE VEGETATION CONTROL GUARDRAIL SYSTEM AT FIXED OBJECT
A77N9	MINOR CONCRETE VEGETATION CONTROL GUARDRAIL SYSTEM AT FIXED OBJECT
A77N10	MINOR CONCRETE VEGETATION CONTROL GUARDRAIL SYSTEM AT FIXED OBJECT
A77N11	MINOR CONCRETE VEGETATION CONTROL GUARDRAIL SYSTEM MISCELLANEOUS DETAILS

GUARDRAIL NOTES

1. WHEN ADJACENT TO HINGE, WHERE THE DISTANCE BETWEEN BACK OF POST AND HINGE POINT IS LESS THAN 30" USE LONG POSTS PER CALTRANS STD PLAN A77N3 'NARROW ROADWAY INSTALLATION'.
2. WHEN ADJACENT TO RETAINING WALL USE REGULAR 6' LONG POST. STRAIGHT GRADE FROM TOP OF AC DIKE AND JOIN TO TOP OF RETAINING WALL.
3. 2 CONSTRUCT MINOR CONCRETE VEGETATION CONTROL AT ALL LOCATIONS PER CALTRANS STANDARD PLANS A77N5 THROUGH A77N11 EXCEPT WHERE MINOR CONCRETE & BLOCK-OUT MATERIAL ARE ALREADY SHOWN ON PLAN.

AC PAVEMENT CLASS AND GRADE LEGEND 1

P2 C2-PG 64-10 P4 D2-PG 64-10

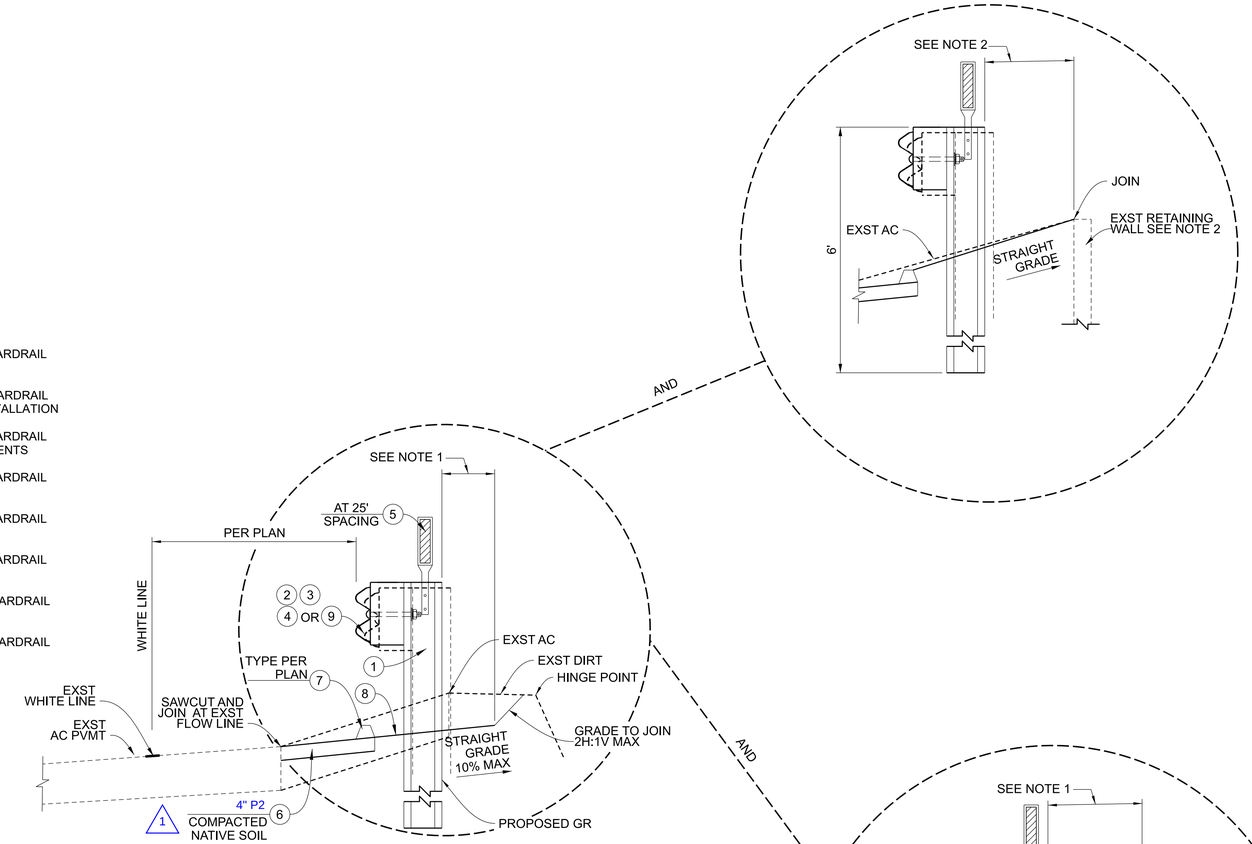

TYPICAL SECTION
NO SCALE

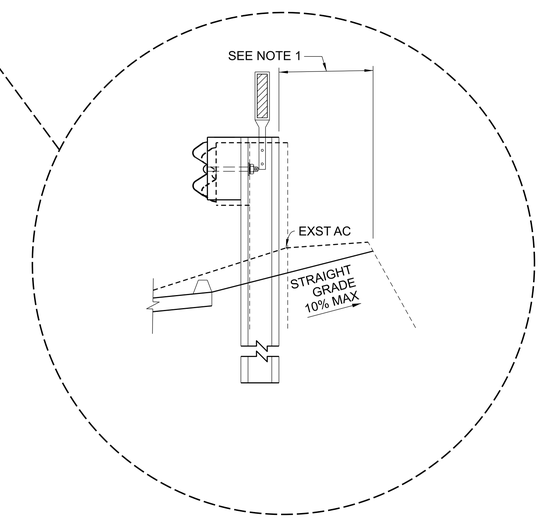

NOTE:

⇨ : INDICATES DIRECTION OF TRAFFIC

DATE	MARK	DESCRIPTION
7/29/25	1	UPDATED AC PVMT AND SH #
11/3/2025	2	ADDED MINOR CONCRETE VEGETATION CONTROL

REVISIONS

REGISTERED PROFESSIONAL ENGINEER CHRISTOPHER HUDSON C 77019 CIVIL STATE OF CALIFORNIA
PROJECT ENGINEER 3/7/2025 DATE

LOS ANGELES COUNTY PUBLIC WORKS

GUARDRAIL REPLACEMENT

VARIOUS LOCATIONS RD336 OFF-SYSTEM (EM2501)
HUME RD LOCATIONS
PROJECT ID NO. RDC0016661
NOTES, REFERENCES, TYPICAL SECTIONS

DWG PH086888 SHEET 2 OF 3

PLAN D

DRAFTER C. HUDSON
DESIGNER C. HUDSON
CHECKER J. MELGAR
CADD PROJECT FILE NAME Palisades Fire CH.dgn
REVIEWED BY DATE

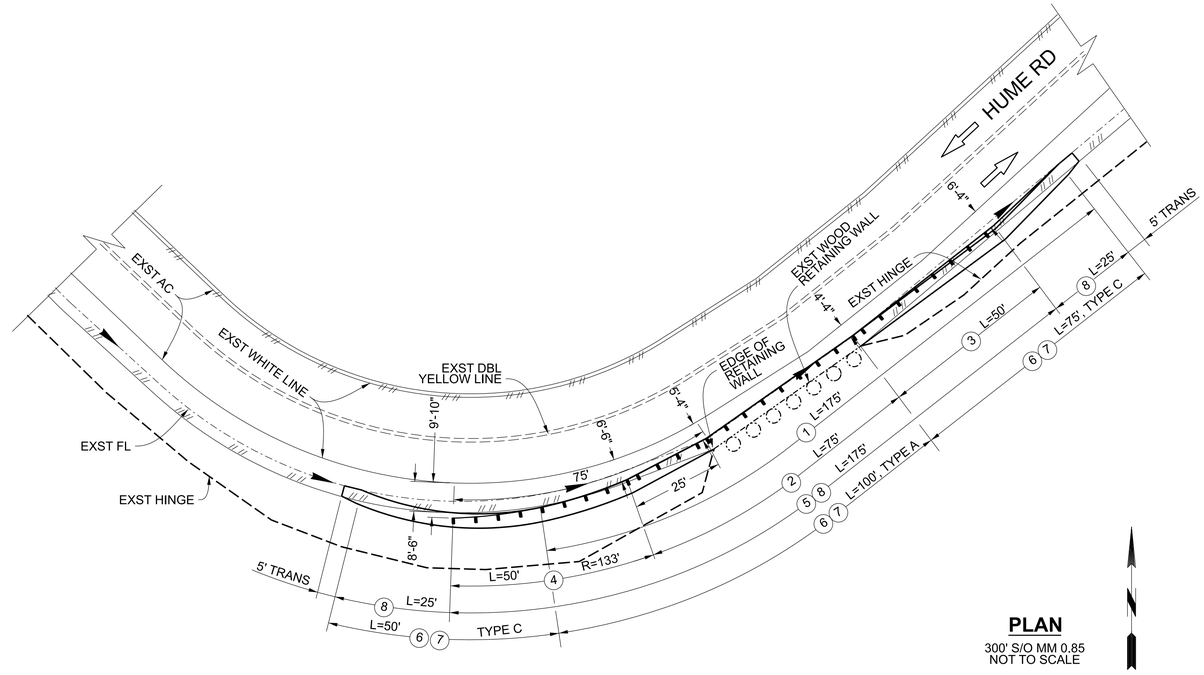

PLAN

300' S/O MM 0.85
NOT TO SCALE

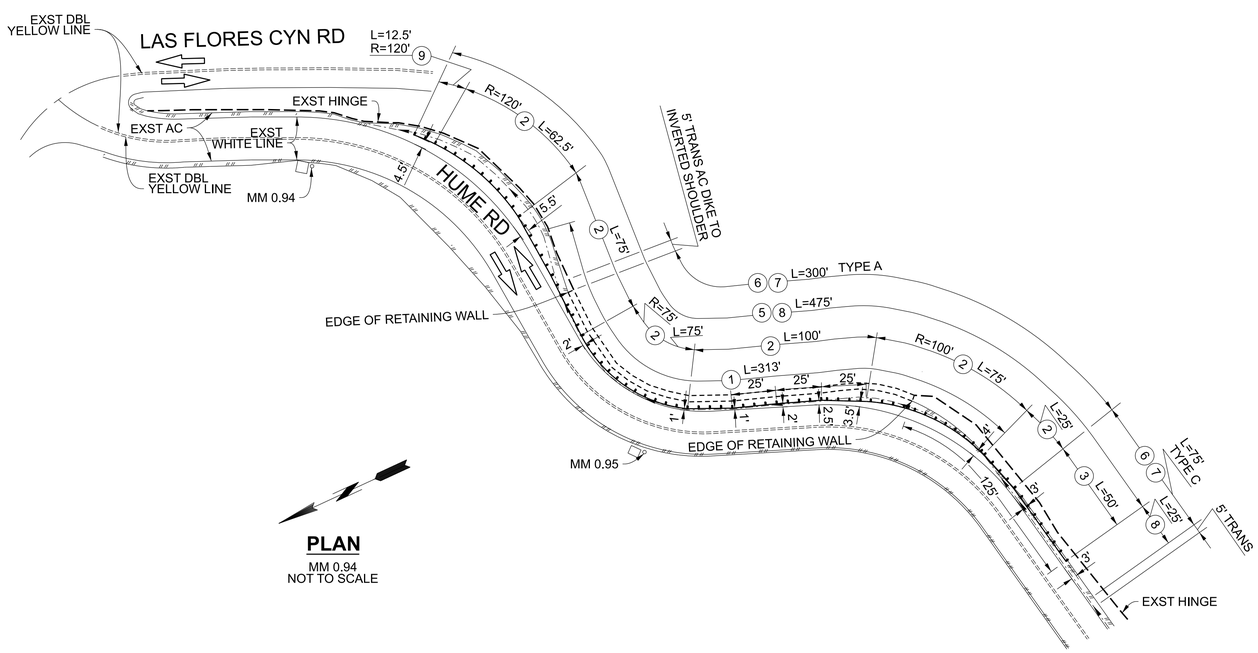

PLAN

MM 0.94
NOT TO SCALE

DATE	MARK	DESCRIPTION
7/29/25	1	UPDATED SH #

REVISIONS

REGISTERED PROFESSIONAL ENGINEER CHRISTOPHER HUDSON C 77019 CIVIL STATE OF CALIFORNIA

PROJECT ENGINEER — DATE 3/7/2025

LOS ANGELES COUNTY PUBLIC WORKS

GUARDRAIL REPLACEMENT

VARIOUS LOCATIONS RD336 OFF-SYSTEM (EM2501)
HUME RD LOCATIONS
PROJECT ID NO. RDC0016661
PLAN

DWG PH086888 | SHEET 3 OF 3

PLAN D

DRAFTER C. HUDSON | DESIGNER C. HUDSON | CHECKER J. MELGAR | CADD PROJECT FILE NAME Palisades Fire CH.dgn | REVIEWED BY | DATE

DATE: 4/16/2025 TIME: 4:48:23 PM FILE: pw://pwedmsprod01.dpw.co.la.ca.us:PW_INT2/Documents/DEPARTMENT PROJECTS (PIW)/DES/DES0003842 - 2025 Palisades File - Guardrail Repair/DES Guardrail/Support/CAD/Palisades Fire CH.dgn

LOS ANGELES COUNTY PUBLIC WORKS

GUARDRAIL REPLACEMENT
VARIOUS LOCATIONS RD336
OFF-SYSTEM (EM2501)

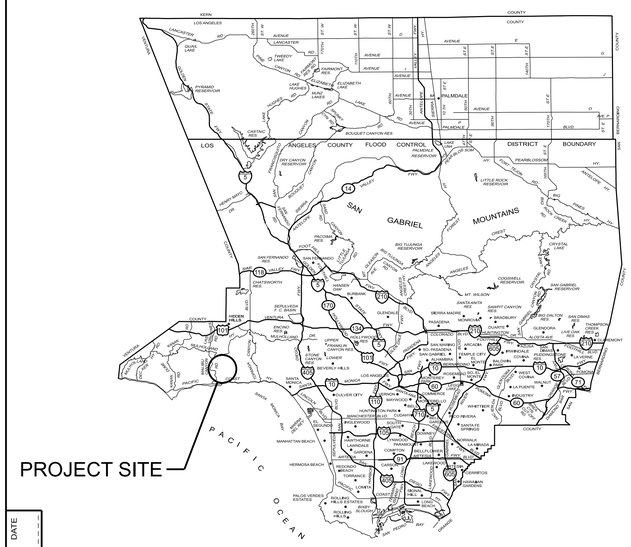

LOCATION MAP
NOT TO SCALE

INDEX TO PROJECT PLANS

SHEET NUMBER	DESCRIPTION
1	TITLE SHEET
2	NOTES AND REFERENCES
3	CASTLEWOOD DR AT MM 0.10 AND AROUND BEND
4	CASTLEWOOD DR AT MM 0.20

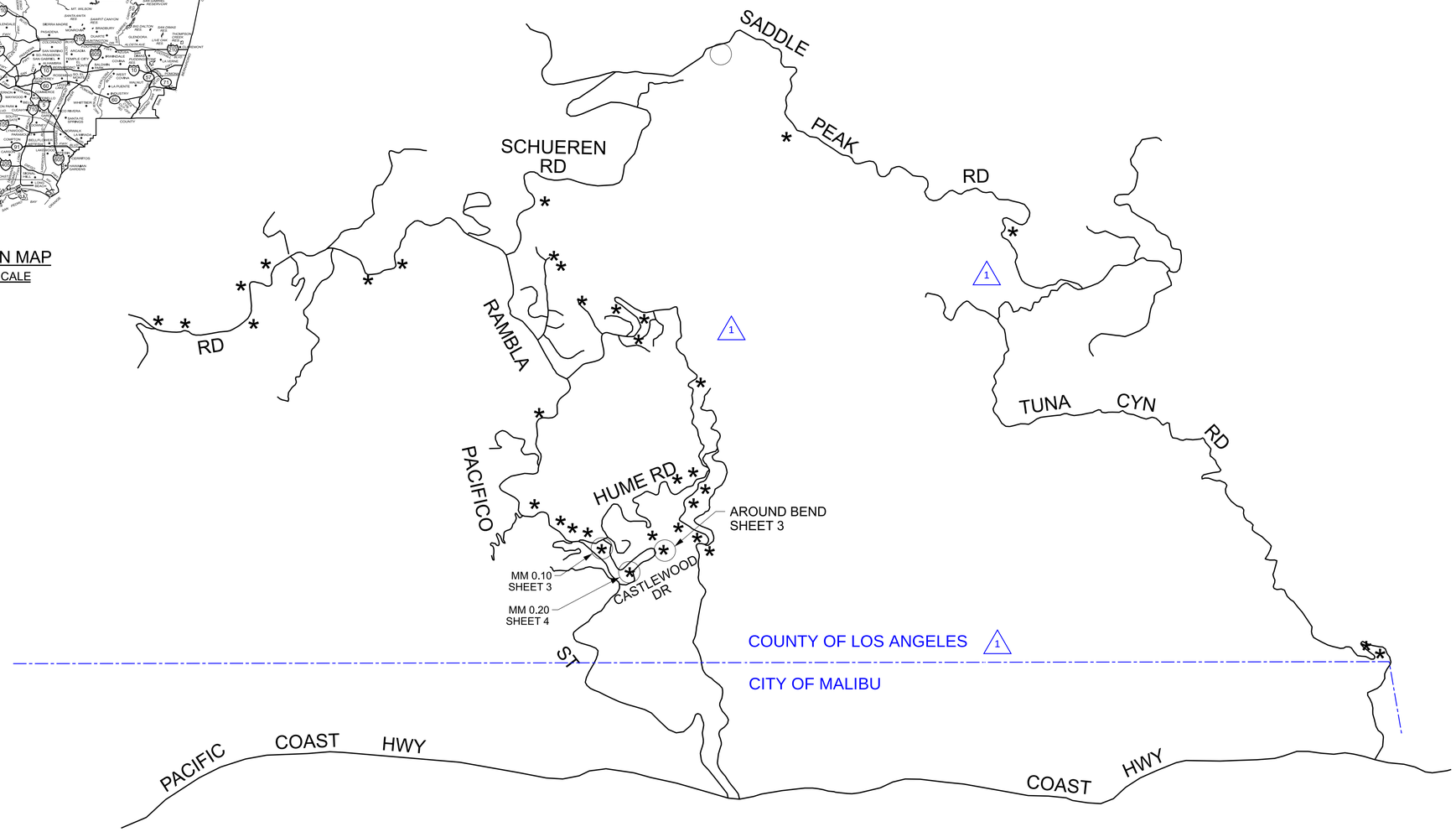

KEY MAP
NOT TO SCALE

DRAFTER	DESIGNER	CHECKER	CADD PROJECT FILE NAME	REVIEWED BY	DATE
C. HUDSON	C. HUDSON	J. MELGAR	Castlewood GR.dgn		

DATE	MARK	DESCRIPTION
7/29/25	1	UPDATED KEY MAP AND SH #

REVISIONS

REGISTERED PROFESSIONAL ENGINEER CHRISTOPHER HUDSON C 77019 CIVIL STATE OF CALIFORNIA

PROJECT ENGINEER 4/7/2025 DATE

LOS ANGELES COUNTY PUBLIC WORKS

GUARDRAIL REPLACEMENT
VARIOUS LOCATIONS RD336 OFF-SYSTEM (EM2501)
CASTLEWOOD DR LOCATIONS
PROJECT ID NO. RDC0016661
TITLE SHEET

DWG PH086888 SHEET 1 OF 4

PLAN E

DATE: 4/16/2025 TIME: 3:45:51 PM FILE: pw://pwedmsprod01.dpw.co.la.ca.us:PW_INT2/Documents/DEPARTMENT PROJECTS (PIW)/DES/DES0003842 - 2025 Palisades File - Guardrail Repair/DES Guardrail/Support/CAD/Castlewood GR.dgn

CONSTRUCTION LEGEND

1. REMOVE & DISPOSE EXISTING METAL BEAM GUARDRAIL
2. MIDWEST GUARDRAIL SYSTEM STANDARD RAILING SECTION PER CALTRANS STD PLAN A77L2 (STEEL POST WITH RECYCLED PLASTIC BLOCK)
3. TERMINAL SYSTEM END TREATMENT (SOFT-STOP TL-2 BY VALTIR, LLC)
4. MIDWEST GUARDRAIL SYSTEM BURIED POST END ANCHOR (TYPE B-F) PER CALTRANS STD A77T2
5. DELINEATOR PER CALTRANS STD PLAN A77N4
6. STRENGTHENED MIDWEST GUARDRAIL SYSTEM PER CALTRANS STD PLAN A77R4
7. SHOULDER GRADING
8. MIDWEST GUARDRAIL SYSTEM END ANCHOR ASSEMBLY (TYPE SFT-M) PER CALTRANS STD PLAN A77S1
9. MINOR CONCRETE AND BLOCK OUT MATERIAL PER CALTRANS STD PLAN A77N5 (1)

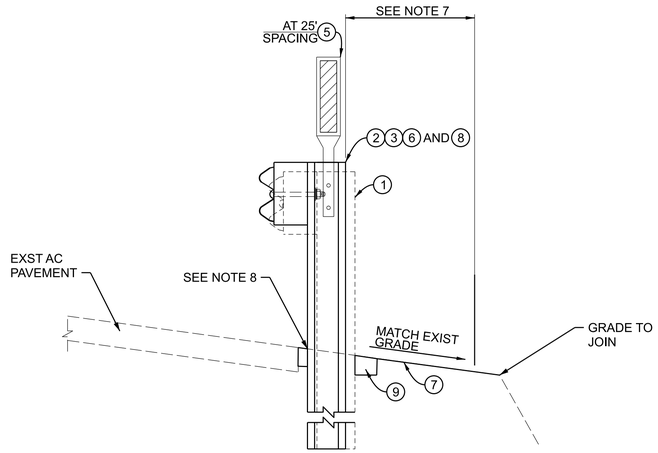

SECTION A
NOT TO SCALE

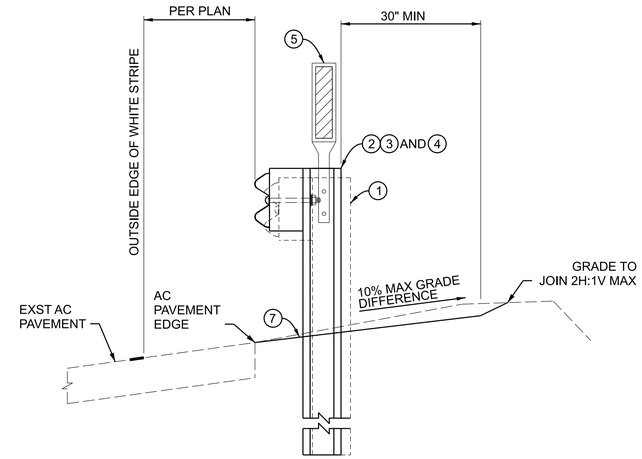

SECTION B
NOT TO SCALE

STANDARD PLANS

STATE OF CALIFORNIA DEPARTMENT OF TRANSPORTATION
STANDARD PLANS (2024 EDITION)

A77L2	MIDWEST GUARDRAIL SYSTEM STANDARD RAILING SECTION (STEEL POST WITH RECYCLED PLASTIC BLOCK)
A77M1	MIDWEST GUARDRAIL SYSTEM STANDARD HARDWARE
A77N3	MIDWEST GUARDRAIL SYSTEM TYPICAL LINE POST EMBEDMENT AND HINGE POINT OFFSET DETAILS
A77N4	MIDWEST GUARDRAIL SYSTEM TYPICAL RAILING DELINEATION AND DIKE POSITIONING DETAILS
A77N5	MINOR CONCRETE VEGETATION CONTROL GUARDRAIL SYSTEM
A77P1	MIDWEST GUARDRAIL SYSTEM TYPICAL LAYOUT FOR EMBANKMENTS
A77P6	MIDWEST GUARDRAIL SYSTEM TYPICAL LAYOUT FOR EMBANKMENTS
A77R4	MIDWEST GUARDRAIL SYSTEM TYPICAL LAYOUTS FOR ROADSIDE FIXED OBJECTS
A77S1	MIDWEST GUARDRAIL SYSTEM END ANCHOR ASSEMBLY (TYPE B-F)
A77T2	MIDWEST GUARDRAIL SYSTEM BURIED POST END ANCHOR (TYPE B-F)
(2) A77N5A	MINOR CONCRETE VEGETATION CONTROL GUARDRAIL SYSTEM NARROW VEGETATION CONTROL INSTALLATION
A77N6	MINOR CONCRETE VEGETATION CONTROL GUARDRAIL SYSTEM FOR TERMINAL SYSTEM END TREATMENTS
A77N7	MINOR CONCRETE VEGETATION CONTROL GUARDRAIL SYSTEM AT STRUCTURE APPROACH
A77N8	MINOR CONCRETE VEGETATION CONTROL GUARDRAIL SYSTEM AT FIXED OBJECT
A77N9	MINOR CONCRETE VEGETATION CONTROL GUARDRAIL SYSTEM AT FIXED OBJECT
A77N10	MINOR CONCRETE VEGETATION CONTROL GUARDRAIL SYSTEM AT FIXED OBJECT
A77N11	MINOR CONCRETE VEGETATION CONTROL GUARDRAIL SYSTEM MISCELLANEOUS DETAILS

GUARDRAIL NOTES

1. ALL STD GUARDRAIL INSTALLATION SHALL BE STEEL POSTS WITH NOTCHED PLASTIC BLOCKS.
2. ALL GUARDRAIL LENGTH AND LOCATION ARE MEASURED ALONG THE FACE OF THE RAILING, UNLESS OTHERWISE SHOWN ON THE PLANS AND DETAILS OR AS DIRECTED BY THE ENGINEER.
3. EACH TERMINAL SYSTEM INSTALLED MUST BE IDENTIFIED BY PAINTING THE TYPE OF THE TERMINAL SYSTEM IN NEAT BLACK LETTERS AND FIGURES 2 INCHES HIGH ON THE BACKSIDE OF THE RAIL ELEMENT BETWEEN SYSTEM POST NUMBERS 4 AND 5.
4. FOR INSTALLATION OF TERMINAL SYSTEMS, BLACK AND YELLOW RETROREFLECTIVE STRIPED SHEETING SHALL BE ADHERED TO THE APPROACH END (S) OF THE GUARDRAIL. THE STRIPES SHALL BE SLOPED DOWN AT AN ANGLE OF 45 DEGREES TOWARDS THE SIDE OF THE ROADWAY ON WHICH TRAFFIC IS TO PASS THE OBSTRUCTION BEING PROTECTED. THE SHEETING SHALL BE CONSISTENT WITH THE DESIGN PATTERN, COLORS, AND DIRECTION OF A TYPE "P(CA)" OBJECT MARKER PER CALIFORNIA MANUAL OF UNIFORM TRAFFIC CONTROL DEVICES (MUTCD) 2014 EDITION, SECTION 2C.65.
5. THE PROPOSED TERMINAL SYSTEM SHALL BE INSTALLED IN A STRAIGHT FLARE OVER THE ENTIRE LENGTH AND SHOULD NOT BE INSTALLED ON A PARABOLIC CURVE.
6. IN-LINE TERMINAL SYSTEMS MUST USE STEEL POSTS AND PLASTIC BLOCKS, AND INSTALLED PER MANUFACTURER'S RECOMMENDATIONS.
7. WHEN ADJACENT TO HINGE, WHERE THE DISTANCE BETWEEN BACK OF POST AND HINGE POINT IS LESS THAN 30" USE LONG POSTS PER CALTRANS STD PLAN A77N3 'NARROW ROADWAY INSTALLATION'.
8. NEW GUARDRAIL SYSTEM SHALL BE INSTALLED AT SAME OFFSET AS EXISTING SYSTEM. USE EXSITING POST HOLES AS REFERENCE FOR ALIGNMENT. ALL EXISTING POST HOLES SHALL BE BACKFILLED WITH GRAVEL OR AGENCY APPROVED EQUAL.

(2) 9. CONSTRUCT MINOR CONCRETE VEGETATION CONTROL AT ALL LOCATIONS PER CALTRANS STANDARD PLANS A77N5 THROUGH A77N11 EXCEPT WHERE MINOR CONCRETE & BLOCK-OUT MATERIAL ARE ALREADY SHOWN ON PLAN.

AC PAVEMENT CLASS AND GRADE LEGEND (1)

P2 C2-PG 64-10 P4 D2-PG 64-10

INDICATES DIRECTION OF TRAFFIC

DATE	MARK	DESCRIPTION
7/29/25	(1)	UPDATED LEGEND AND SH #
11/3/2025	(2)	ADDED MINOR CONCRETE VEGETATION CONTROL

REVISIONS

REGISTERED PROFESSIONAL ENGINEER CHRISTOPHER HUDSON C 77019 CIVIL STATE OF CALIFORNIA

PROJECT ENGINEER 4/7/2025 DATE

LOS ANGELES COUNTY PUBLIC WORKS

GUARDRAIL REPLACEMENT

VARIOUS LOCATIONS RD336 OFF-SYSTEM (EM2501)
CASTLEWOOD DR LOCATIONS
PROJECT ID NO. RDC0016661
NOTES, REFERENCES, TYPICAL SECTIONS

DWG PH086888 SHEET 2 OF 4

PLAN E

DRAFTER Z. VASQUEZ | DESIGNER C. HUDSON | CHECKER J. MELGAR | CADD PROJECT FILE NAME Castlewood GR.dgn | REVIEWED BY | DATE

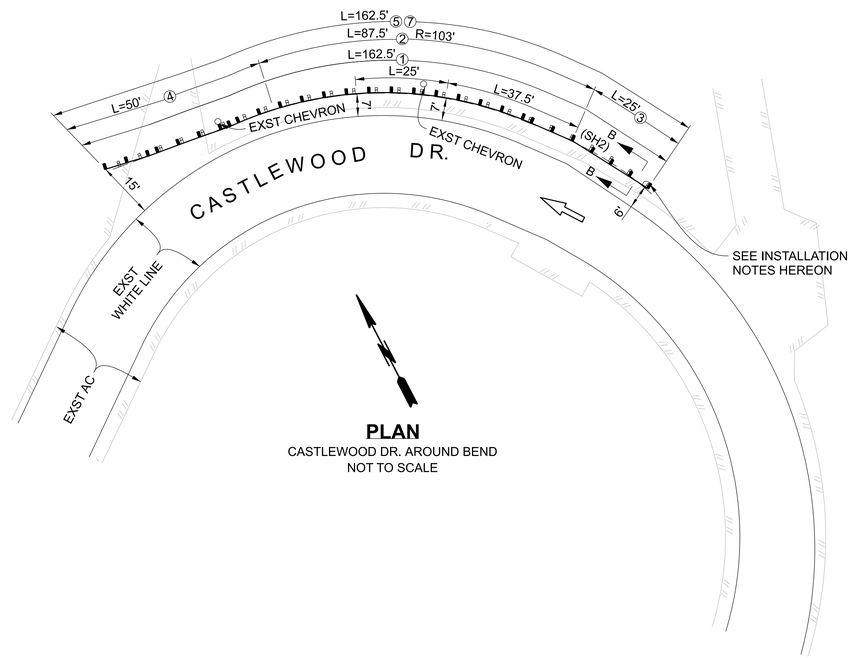

PLAN
CASTLEWOOD DR. AROUND BEND
NOT TO SCALE

CASTLEWOOD DR AROUND BEND INSTALLATION NOTES

1. START GUARDRAIL INSTALLATION AT EXST CHEVRON
2. DAMAGED AND CONFLICTING CHEVRON SIGNS SHALL BE INSTALLED BY AGENCY 1' BEHIND BACK OF NEW POST. CONTACT OPERATIONAL SERVICES DIVISION AT (626) 458-1708 FIVE DAYS PRIOR TO CONSTRUCTING TO COORDINATE ALL SIGN WORK.

PLAN
MM 0.10
NOT TO SCALE

INDICATES DIRECTION OF TRAFFIC

DATE	MARK	DESCRIPTION
7/29/25	1	UPDATED SH #

REVISIONS

REGISTERED PROFESSIONAL ENGINEER CHRISTOPHER HUDSON C 77019 CIVIL STATE OF CALIFORNIA
PROJECT ENGINEER 4/7/2025 DATE

LOS ANGELES COUNTY PUBLIC WORKS

GUARDRAIL REPLACEMENT

VARIOUS LOCATIONS RD336 OFF-SYSTEM (EM2501)
CASTLEWOOD DR AT MM 0.10 & AROUND BEND
PROJECT ID NO. RDC0016661
PLAN

DWG PH086888 | SHEET 3 OF 4

PLAN E

DRAFTER	DESIGNER	CHECKER	REVIEWED BY	DATE	CADD PROJECT FILE NAME
Z. VASQUEZ	C. HUDSON	J. MELGAR			Castlewood GR.dgn

DATE: 4/16/2025 TIME: 3:00:14 PM FILE: pw://pwedmsprod01.dpw.co.la.ca.us:PW_INT2/Documents/DEPARTMENT PROJECTS (PIW)/DES/DES0003842 - 2025 Palisades File - Guardrail Repair/DES Guardrail/Support/CAD/Castlewood GR.dgn

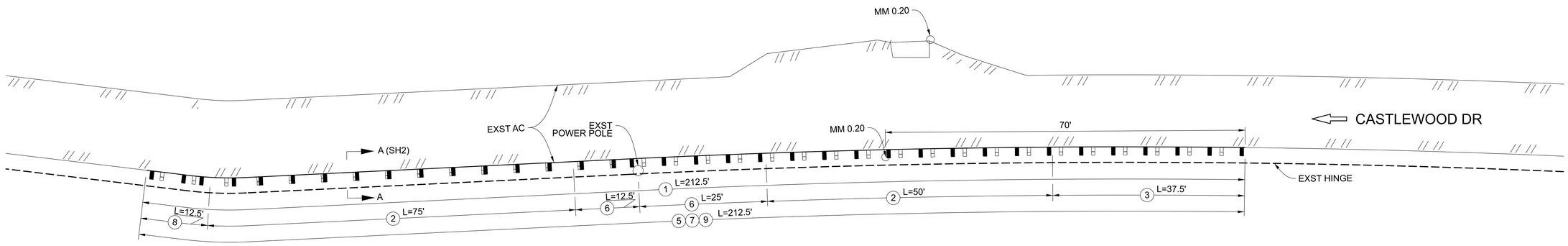

PLAN

CASTLEWOOD DR, MM 0.20
NOT TO SCALE

DATE	MARK	DESCRIPTION
7/29/25	1	UPDATED SH #

REVISIONS

REGISTERED PROFESSIONAL ENGINEER CHRISTOPHER HUDSON C 77019 CIVIL STATE OF CALIFORNIA

PROJECT ENGINEER 4/7/2025 DATE

LOS ANGELES COUNTY PUBLIC WORKS

GUARDRAIL REPLACEMENT

VARIOUS LOCATIONS RD336 OFF-SYSTEM (EM2501)
CASTLEWOOD DR AT MM 0.20
PROJECT ID NO. RDC0016661
PLAN

DWG PH086888 | SHEET 4 OF 4

PLAN E

DRAFTER C. HUDSON | DESIGNER C. HUDSON | CHECKER J. MELGAR | CADD PROJECT FILE NAME Castlewood GR.dgn | REVIEWED BY | DATE

DATE: 4/16/2025 TIME: 2:51:40 PM FILE: pw://pwedmsprod01.dpw.co.la.ca.us:PW_INT2/Documents/DEPARTMENT PROJECTS (PIW)/DES/DES0003842 - 2025 Palisades File - Guardrail Repair/DES Guardrail/Support/CAD/Castlewood GR.dgn

LOS ANGELES COUNTY PUBLIC WORKS

GUARDRAIL REPLACEMENT
VARIOUS LOCATIONS RD336
OFF-SYSTEM (EM2501)

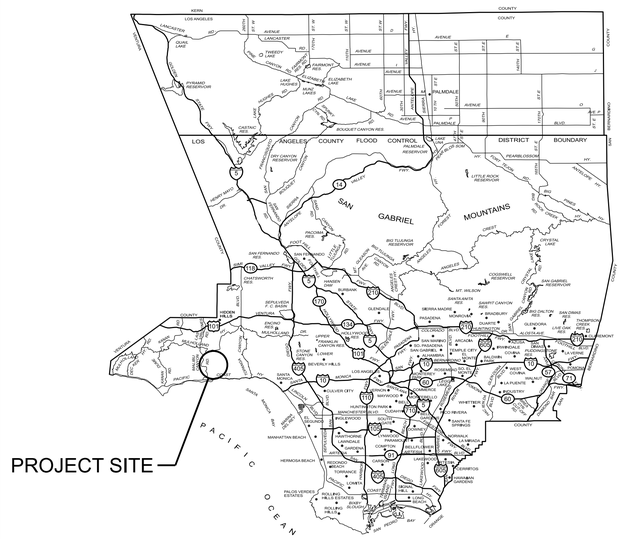

LOCATION MAP
NOT TO SCALE

INDEX TO PROJECT PLANS

SHEET NUMBER	DESCRIPTION
1	TITLE SHEET
2	NOTES AND REFERENCES
3	SCHUEREN RD AT MM 1.46 PLAN
4	SADDLE PEAK RD AT MM 0.54 PLAN

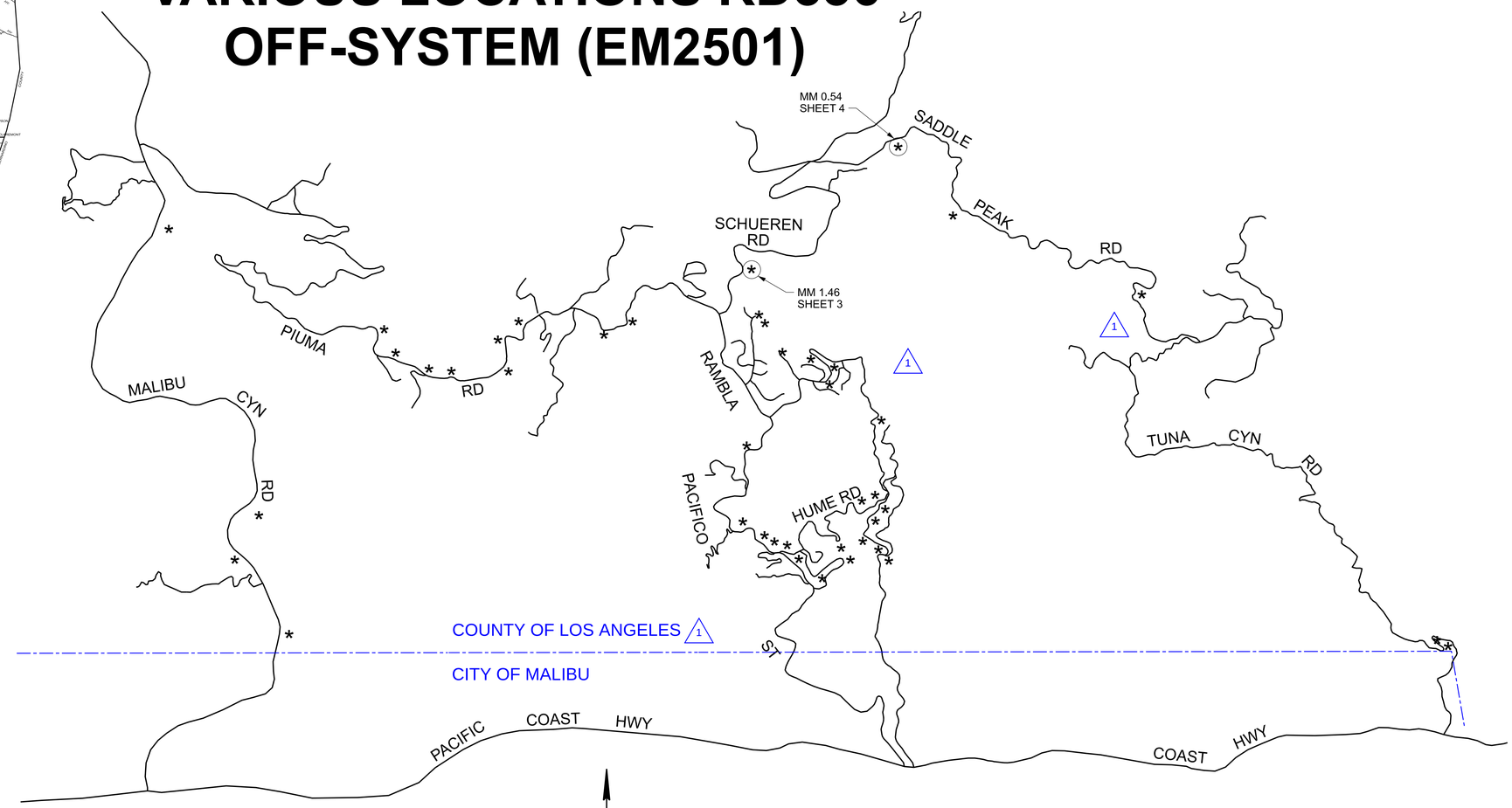

KEY MAP
NOT TO SCALE

DRAFTER	DESIGNER	CHECKER	CADD PROJECT FILE NAME
C. HUDSON	C. HUDSON	J. MELGAR	Palisades Fire CH.dgn

DATE	MARK	DESCRIPTION
7/29/25	1	UPDATED KEY MAP AND SH #

REVISIONS

REGISTERED PROFESSIONAL ENGINEER CHRISTOPHER HUDSON C 77019 CIVIL STATE OF CALIFORNIA

PROJECT ENGINEER 3/7/2025 DATE

LOS ANGELES COUNTY PUBLIC WORKS

GUARDRAIL REPLACEMENT
VARIOUS LOCATIONS RD336 OFF-SYSTEM (EM2501)
SCHUEREN ROAD AT MM 1.46 &
SADDLE PEAK RD AT MM 0.54
PROJECT ID NO. RDC0016661
TITLE SHEET

DWG PH086888 | SHEET 1 OF 4

PLAN F

DATE: 4/16/2025 TIME: 5:11:06 PM FILE: pw://pwedmsprod01.dpw.co.la.ca.us:PW_INT2/Documents/DEPARTMENT PROJECTS (PIW)/DES/DES0003842 - 2025 Palisades File - Guardrail Repair/DES Guardrail/Support/CAD/Palisades Fire CH.dgn

CONSTRUCTION LEGEND

1. REMOVE & DISPOSE OF EXISTING GUARDRAIL (INCLUDING POSTS)
2. IN-LINE TERMINAL SYSTEM (TL2)
3. IN-LINE TERMINAL SYSTEM (TL3)
4. MIDWEST GUARDRAIL SYSTEM (STEEL POST W/ PLASTIC BLOCK)
6. MIDWEST GUARDRAIL SYSTEM TRANSITION TO METAL BEAM GUARDRAIL
7. STRENGTHENED MIDWEST GUARDRAIL SYSTEM (CALTRANS STD PLAN A77R4)
8. MIDWEST GUARDRAIL SYSTEM END ANCHOR ASSEMBLY (TYPE SFT-M)
9. MIDWEST GUARDRAIL SYSTEM BURIED POST END ANCHOR (TYPE B-F)
10. TRANSITION RAILING (TYPE AGT)
11. CONCRETE BARRIER
12. CRASH CUSHION
13. DELINEATOR PER CALTRANS STD PLAN A77N4
14. AC PAVEMENT P2 (C2- PG 64-10) 1
15. REMOVE EXISTING INVERTED SHOULDER
16. HMA DIKE (TYPE PER PLAN)
17. RURAL CATCH BASIN
18. SHOULDER GRADING

STANDARD PLANS

STATE OF CALIFORNIA DEPARTMENT OF TRANSPORTATION STANDARD PLANS (2024 EDITION)

A77L2	MIDWEST GUARDRAIL SYSTEM STANDARD RAILING SECTION
A77M1	MIDWEST GUARDRAIL SYSTEM STANDARD HARDWARE
A77N3	MIDWEST GUARDRAIL SYSTEM TYPICAL LINE POST EMBEDMENT AND HINGE POINT OFFSET DETAILS
A77N4	MIDWEST GUARDRAIL SYSTEM TYPICAL RAILING DELINEATION AND DIKE POSITIONING DETAILS
A77P2	MIDWEST GUARDRAIL SYSTEM TYPICAL LAYOUT FOR EMBANKMENTS
A77R3	MIDWESY GUARDRAIL SYSTEM TYPICAL LAYOUTS FOR ROADSIDE FIXED OBJECTS
A77R4	MIDWEST GUARDRAIL SYSTEM TYPICAL LAYOUTS FOR ROADSIDE FIXED OBJECTS
A77S1	MIDWEST GUARDRAIL SYSTEM END ANCHOR ASSEMBLY (TYPE SFT-M)
A77T2	MIDWEST GUARDRAIL SYSTEM BURIED POST END ANCHOR (TYPE B-F)
A87B	HOT MIX ASPHALT DIKES
2 A77N5	MINOR CONCRETE VEGETATION CONTROL GUARDRAIL SYSTEM
A77N5A	MINOR CONCRETE VEGETATION CONTROL GUARDRAIL SYSTEM NARROW VEGETATION CONTROL INSTALLATION
A77N6	MINOR CONCRETE VEGETATION CONTROL GUARDRAIL SYSTEM FOR TERMINAL SYSTEM END TREATMENTS
A77N7	MINOR CONCRETE VEGETATION CONTROL GUARDRAIL SYSTEM AT STRUCTURE APPROACH
A77N8	MINOR CONCRETE VEGETATION CONTROL GUARDRAIL SYSTEM AT FIXED OBJECT
A77N9	MINOR CONCRETE VEGETATION CONTROL GUARDRAIL SYSTEM AT FIXED OBJECT
A77N10	MINOR CONCRETE VEGETATION CONTROL GUARDRAIL SYSTEM AT FIXED OBJECT
A77N11	MINOR CONCRETE VEGETATION CONTROL GUARDRAIL SYSTEM MISCELLANEOUS DETAILS

GUARDRAIL NOTES

1. ALL STD GUARDRAIL INSTALLATION SHALL BE STEEL POSTS WITH NOTCHED PLASTIC BLOCKS.
2. ALL GUARDRAIL LENGTH AND LOCATION ARE MEASURED ALONG THE FACE OF THE RAILING, UNLESS OTHERWISE SHOWN ON THE PLANS AND DETAILS OR AS DIRECTED BY THE ENGINEER.
3. EACH TERMINAL SYSTEM INSTALLED MUST BE IDENTIFIED BY PAINTING THE TYPE OF THE TERMINAL SYSTEM IN NEAT BLACK LETTERS AND FIGURES 2 INCHES HIGH ON THE BACKSIDE OF THE RAIL ELEMENT BETWEEN SYSTEM POST NUMBERS 4 AND 5.
4. FOR INSTALLATION OF TERMINAL SYSTEMS, BLACK AND YELLOW RETROREFLECTIVE STRIPED SHEETING SHALL BE ADHERED TO THE APPROACH END (S) OF THE GUARDRAIL. THE STRIPES SHALL BE SLOPED DOWN AT AN ANGLE OF 45 DEGREES TOWARDS THE SIDE OF THE ROADWAY ON WHICH TRAFFIC IS TO PASS THE OBSTRUCTION BEING PROTECTED. THE SHEETING SHALL BE CONSISTENT WITH THE DESIGN PATTERN, COLORS, AND DIRECTION OF A TYPE "P(CA)" OBJECT MARKER PER CALIFORNIA MANUAL OF UNIFORM TRAFFIC CONTROL DEVICES (MUTCD) 2014 EDITION, SECTION 2C.65.
5. THE PROPOSED TERMINAL SYSTEM SHALL BE INSTALLED IN A STRAIGHT FLARE OVER THE ENTIRE LENGTH AND SHOULD NOT BE INSTALLED ON A PARABOLIC CURVE.
6. IN-LINE TERMINAL SYSTEMS MUST USE STEEL POSTS AND PLASTIC BLOCKS, AND INSTALLED PER MANUFACTURER'S RECOMMENDATIONS.
7. WHEN ADJACENT TO HINGE, WHERE THE DISTANCE BETWEEN BACK OF POST AND HINGE POINT IS LESS THAN 30" USE LONG POSTS PER CALTRANS STD PLAN A77N3 'NARROW ROADWAY INSTALLATION'.

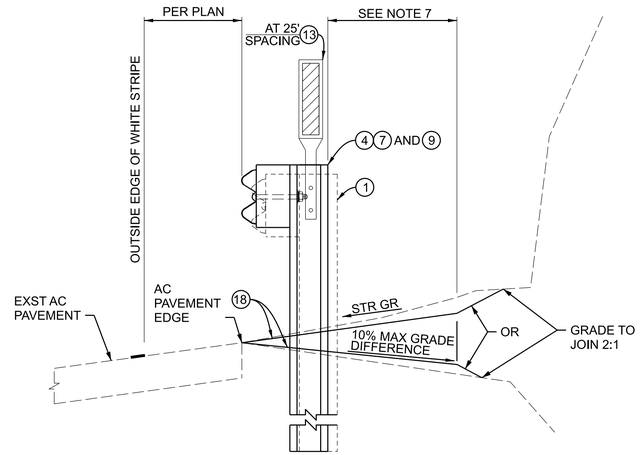

SECTION A
NOT TO SCALE

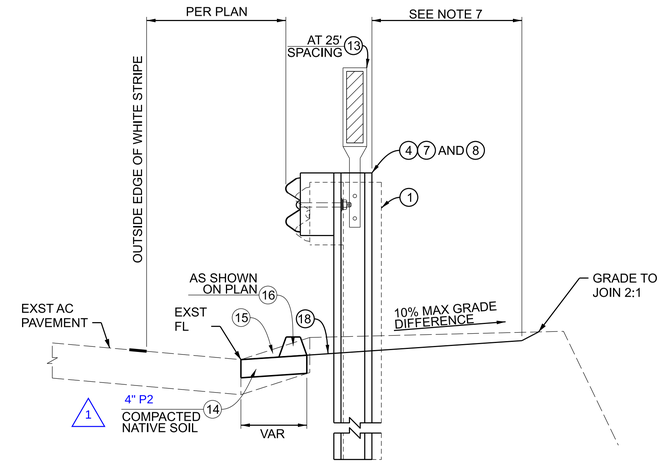

SECTION B
NOT TO SCALE

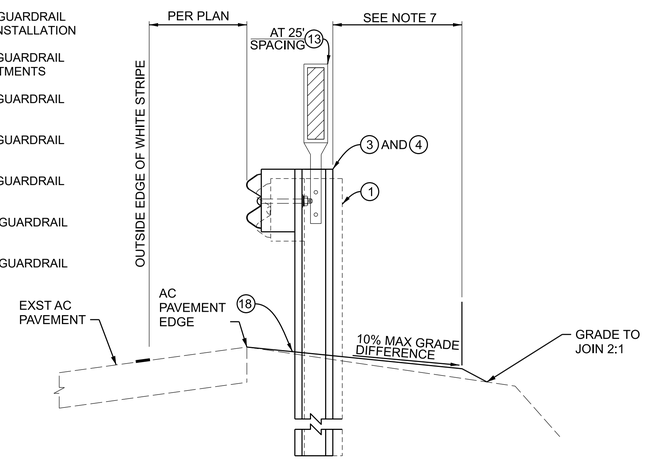

SECTION C
NOT TO SCALE

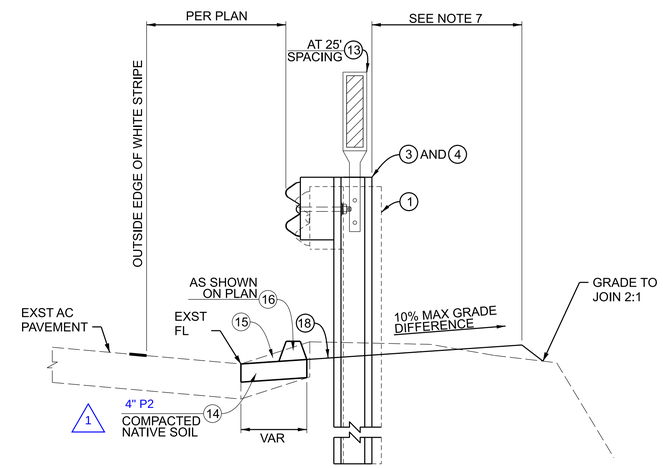

SECTION D
NOT TO SCALE

NOTE:

⇨ : INDICATES DIRECTION OF TRAFFIC

AC PAVEMENT CLASS AND GRADE LEGEND 1

P2 C2-PG 64-10 P4 D2-PG 64-10

2 8. CONSTRUCT MINOR CONCRETE VEGETATION CONTROL AT ALL LOCATIONS PER CALTRANS STANDARD PLANS A77N5 THROUGH A77N11 EXCEPT WHERE MINOR CONCRETE & BLOCK-OUT MATERIAL ARE ALREADY SHOWN ON PLAN.

DATE	MARK	DESCRIPTION
7/29/25	1	UPDATED AC PVMT AND SH #
11/3/2025	2	ADDED MINOR CONCRETE VEGETATION CONTROL

REVISIONS

REGISTERED PROFESSIONAL ENGINEER CHRISTOPHER HUDSON C 77019 CIVIL STATE OF CALIFORNIA
PROJECT ENGINEER 3/7/2025 DATE

LOS ANGELES COUNTY PUBLIC WORKS

GUARDRAIL REPLACEMENT

VARIOUS LOCATIONS RD336 OFF-SYSTEM (EM2501)
SCHUEREN ROAD AT MM 1.46 &
SADDLE PEAK RD AT MM 0.54
PROJECT ID NO. RDC0016661
NOTES, REFERENCES, TYPICAL SECTIONS

DWG PH086888 SHEET 2 OF 4

PLAN F

DRAFTER C. HUDSON | DESIGNER C. HUDSON | CHECKER J. MELGAR | CADD PROJECT FILE NAME Palisades Fire CH.dgn | REVIEWED BY | DATE

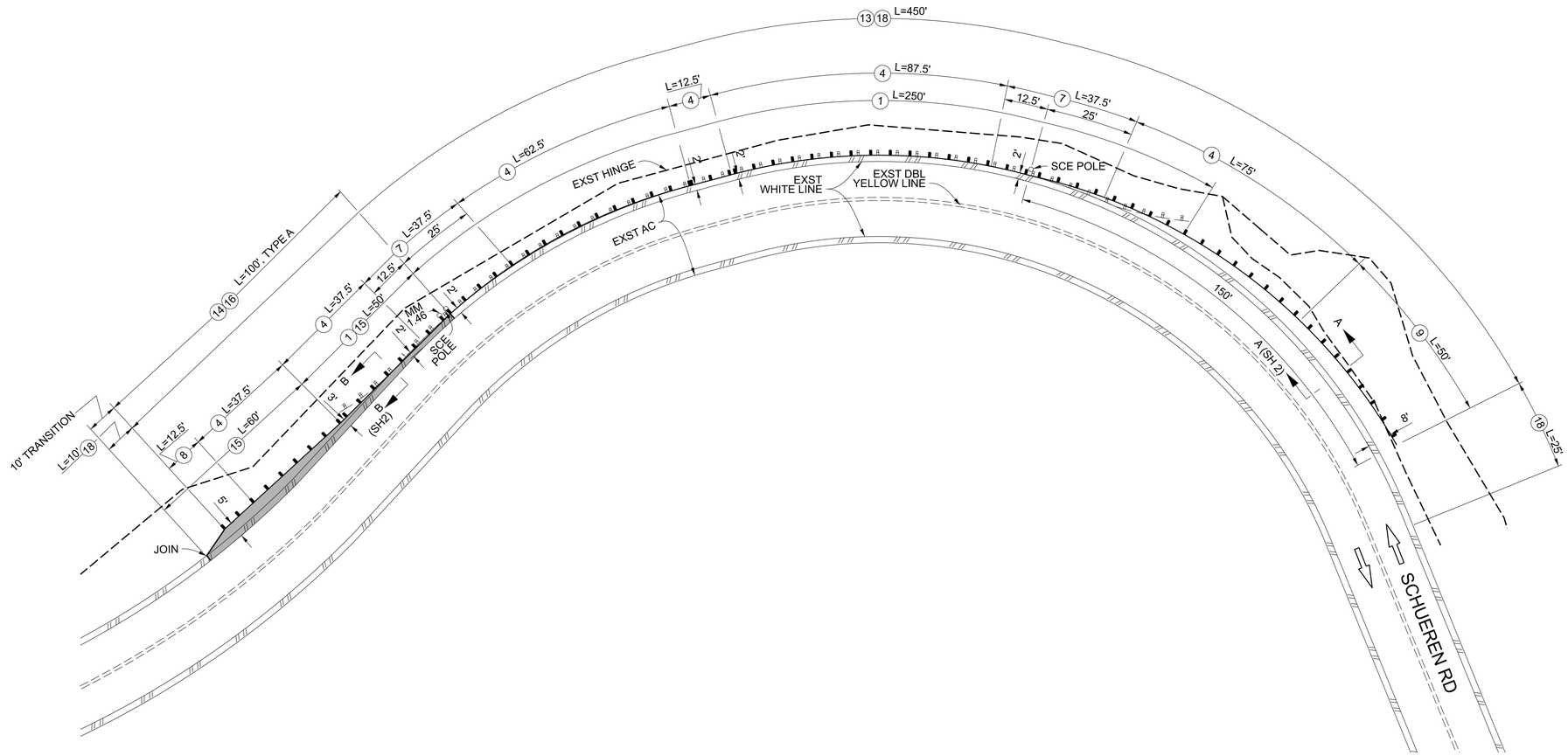

PLAN

NOT TO SCALE

DATE	MARK	DESCRIPTION
7/29/25	1	UPDATED SH #

REVISIONS

REGISTERED PROFESSIONAL ENGINEER CHRISTOPHER HUDSON C 77019 CIVIL STATE OF CALIFORNIA

PROJECT ENGINEER 3/7/2025 DATE

LOS ANGELES COUNTY PUBLIC WORKS

GUARDRAIL REPLACEMENT

VARIOUS LOCATIONS RD336 OFF-SYSTEM (EM2501)
SCHUEREN ROAD AT MM 1.46
PROJECT ID NO. RDC0016661
PLAN

DWG PH086888 SHEET 3 OF 4

PLAN F

DRAFTER C. HUDSON | DESIGNER C. HUDSON | CHECKER J. MELGAR | CADD PROJECT FILE NAME Palisades Fire CH.dgn | REVIEWED BY | DATE

DATE: 4/16/2025 TIME: 4:24:12 PM FILE: pw://pwedmsprod01.dpw.co.la.ca.us:PW_INT2/Documents/DEPARTMENT PROJECTS (PIW)/DES/DES0003842 - 2025 Palisades File - Guardrail Repair/DES Guardrail/Support/CAD/Palisades Fire CH.dgn

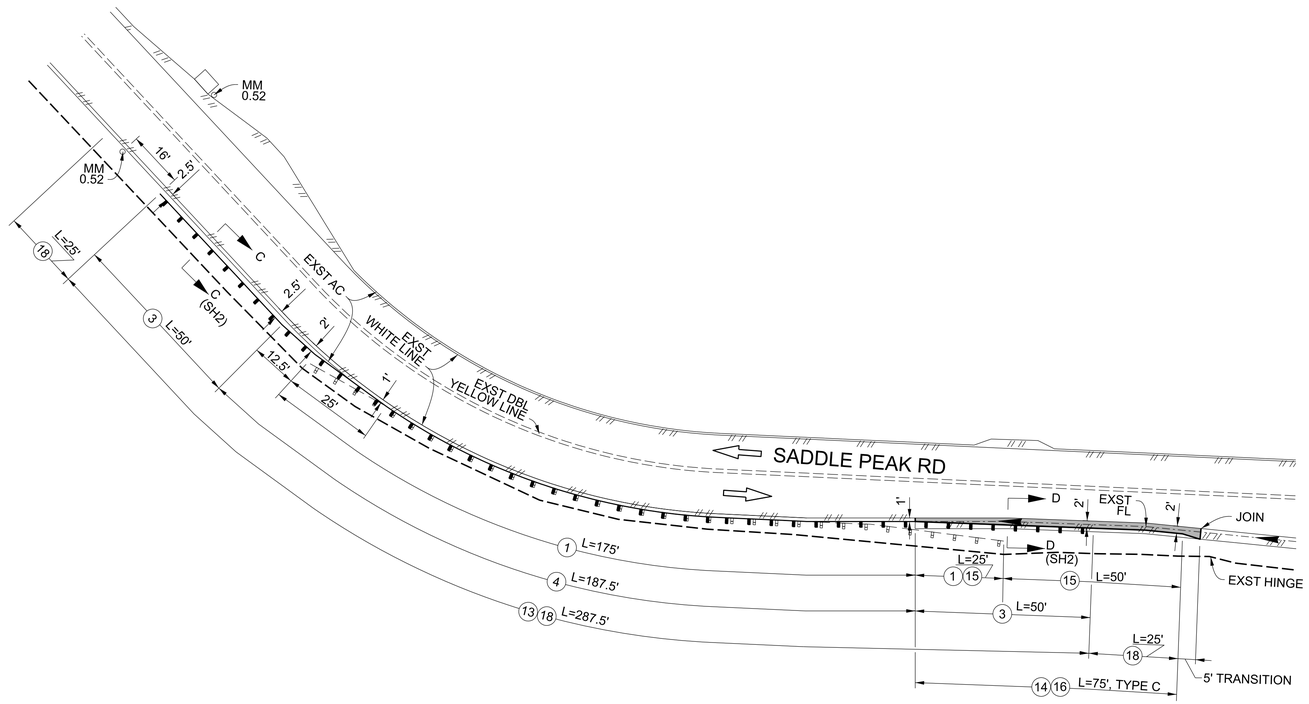

PLAN

NOT TO SCALE

DATE	MARK	DESCRIPTION
7/29/25	1	UPDATED SH #

REVISIONS

REGISTERED PROFESSIONAL ENGINEER
CHRISTOPHER HUDSON
C 77019
CIVIL
STATE OF CALIFORNIA

PROJECT ENGINEER 3/7/2025 DATE

LOS ANGELES COUNTY PUBLIC WORKS

GUARDRAIL REPLACEMENT

VARIOUS LOCATIONS RD336 OFF-SYSTEM (EM2501)
SADDLE PEAK RD AT MM 0.54
PROJECT ID NO. RDC0016661
PLAN

DWG PH086888 | SHEET 4 OF 4

PLAN F

DRAFTER C. HUDSON
DESIGNER C. HUDSON
CHECKER J. MELGAR
CADD PROJECT FILE NAME Palisades Fire CH.dgn
REVIEWED BY
DATE

DATE: 4/16/2025 TIME: 4:29:36 PM FILE: pw://pwedmsprod01.dpw.co.la.ca.us:PW_INT2/Documents/DEPARTMENT PROJECTS (PIW)/DES/DES0003842 - 2025 Palisades File - Guardrail Repair/DES Guardrail/Support/CAD/Palisades Fire CH.dgn

LOS ANGELES COUNTY PUBLIC WORKS

GUARDRAIL REPLACEMENT
VARIOUS LOCATIONS RD336
OFF-SYSTEM (EM2501)

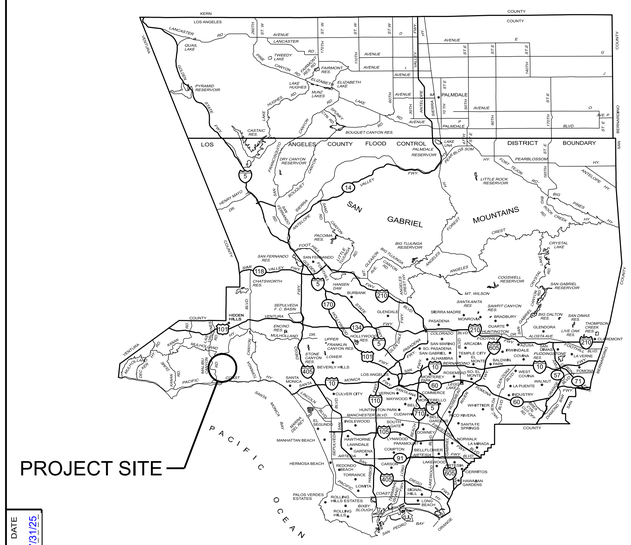

LOCATION MAP
NOT TO SCALE

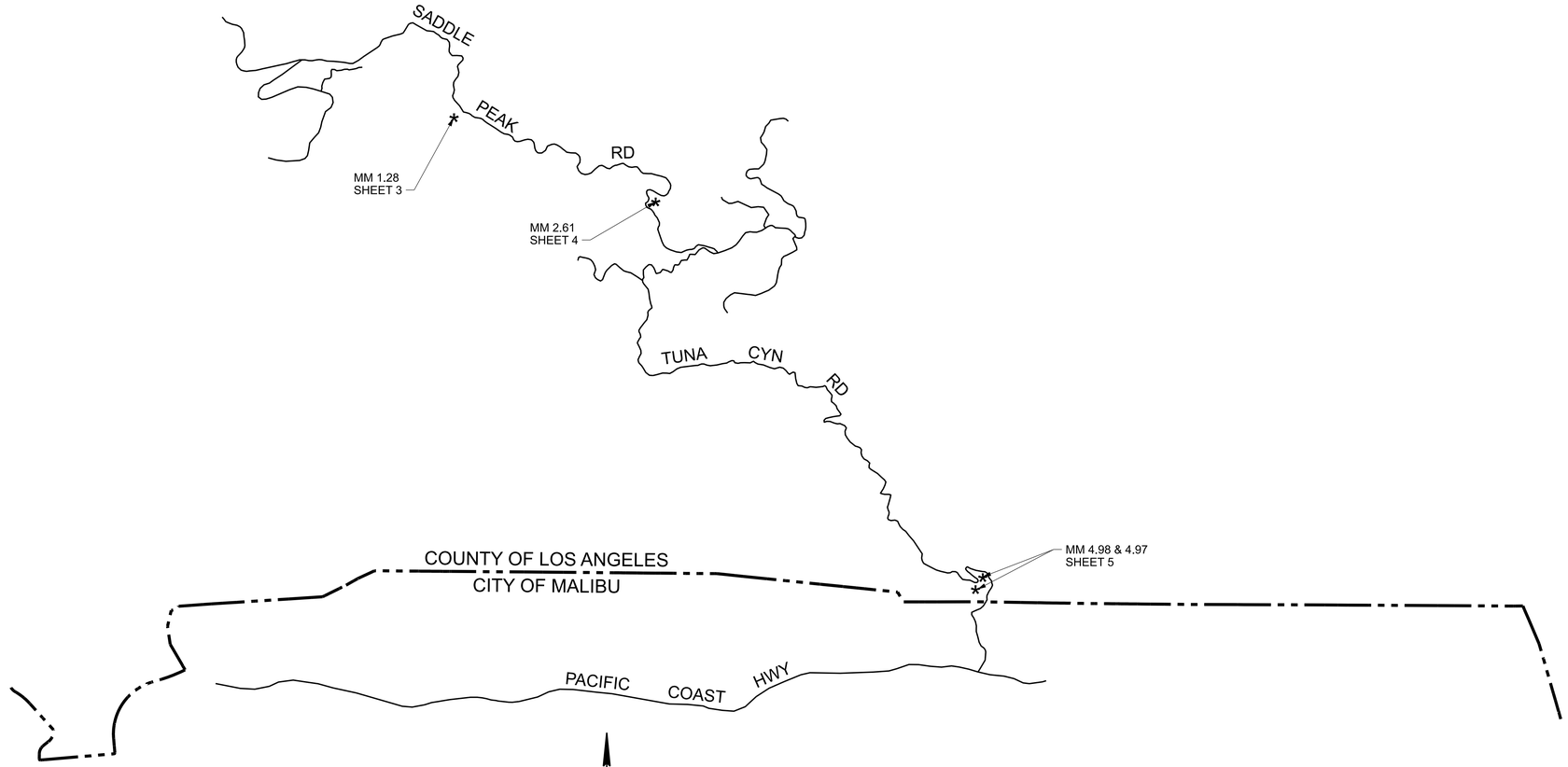

KEY MAP
NOT TO SCALE

INDEX TO PROJECT PLANS

SHEET NUMBER	DESCRIPTION
1	TITLE SHEET
2	NOTES, REFERENCES, TYPICAL SECTIONS
3-5	PLAN

DRAFTER	DESIGNER	CADD PROJECT FILE NAME	REVIEWED BY	DATE
L. KESHISHIAN	B. SUBEH	Saddle Peak Rd.dgn		7/31/25

DATE	MARK	DESCRIPTION

REVISIONS

REGISTERED PROFESSIONAL ENGINEER
BASHAR M. SUBEH
C 91667
CIVIL
STATE OF CALIFORNIA

PROJECT ENGINEER 7/31/2025 DATE

LOS ANGELES COUNTY PUBLIC WORKS

GUARDRAIL REPLACEMENT
VARIOUS LOCATIONS RD336 OFF-SYSTEM (EM2501)
SADDLE PEAK ROAD & TUNA CANYON ROAD
PROJECT ID NO. RDC0016661
TITLE SHEET

DWG PH086888 SHEET 1 OF 5

PLAN G

DATE: 7/31/2025 TIME: 3:35:24 PM FILE: pw://pwedmsprod01.dpw.co.la.ca.us:PW_INT2/Documents/DEPARTMENT PROJECTS (PIW)/DES/DES0003842 - 2025 Palisades File - Guardrail Repair/DES Guardrail/Support/CAD/LK/Saddle Peak Rd

CONSTRUCTION LEGEND

1. REMOVE & DISPOSE OF EXISTING GUARDRAIL (INCLUDING POSTS)
2. IN-LINE TERMINAL SYSTEM (TL2)
3. IN-LINE TERMINAL SYSTEM (TL3)
4. MIDWEST GUARDRAIL SYSTEM (STEEL POST W/ PLASTIC BLOCK)
5. MIDWEST GUARDRAIL SYSTEM (STEEL POST W/ PLASTIC BLOCK) (8' POST)
6. MIDWEST GUARDRAIL SYSTEM TRANSITION TO METAL BEAM GUARDRAIL
7. STRENGTHENED MIDWEST GUARDRAIL SYSTEM (CALTRANS STD PLAN A77R4)
8. MIDWEST GUARDRAIL SYSTEM END ANCHOR ASSEMBLY (TYPE SFT-M)
9. MIDWEST GUARDRAIL SYSTEM BURIED POST END ANCHOR (TYPE B-F)
10. TRANSITION RAILING (TYPE AGT)
11. CONCRETE BARRIER
12. CRASH CUSHION
13. DELINEATOR PER CALTRANS STD PLAN A77N4
14. AC PAVEMENT (P2 C2-PG 64-10)
15. REMOVE EXISTING INVERTED SHOULDER
16. HMA DIKE (TYPE PER PLAN)
17. RURAL CATCH BASIN
18. SHOULDER GRADING

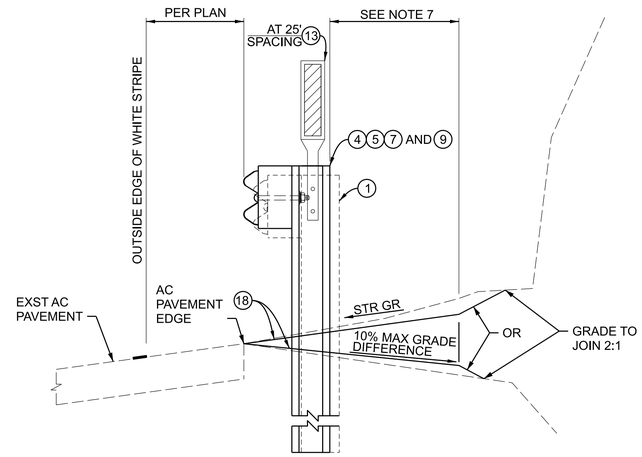

SECTION A
NOT TO SCALE

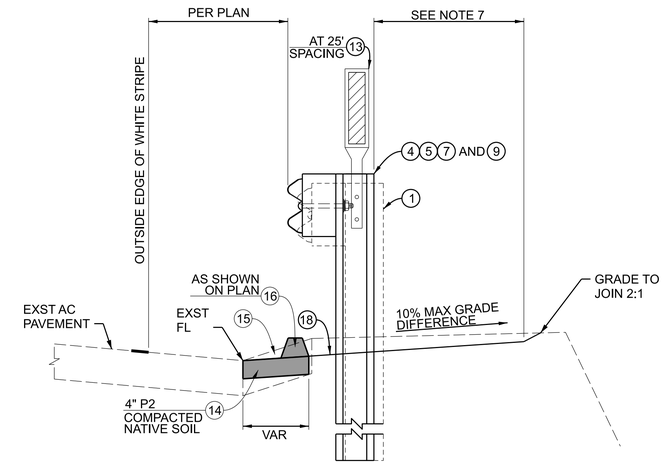

SECTION B
NOT TO SCALE

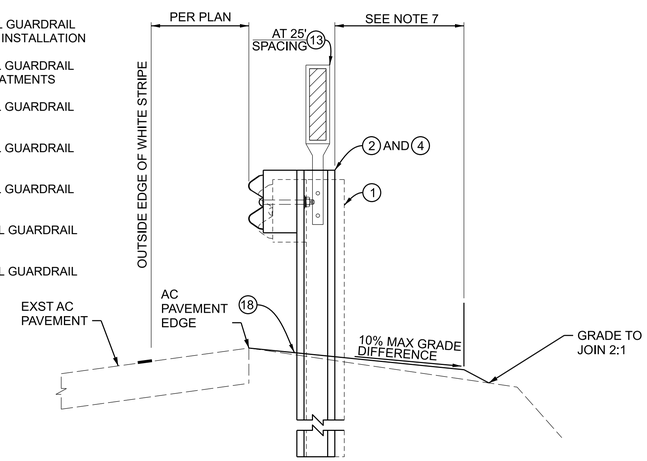

SECTION C
NOT TO SCALE

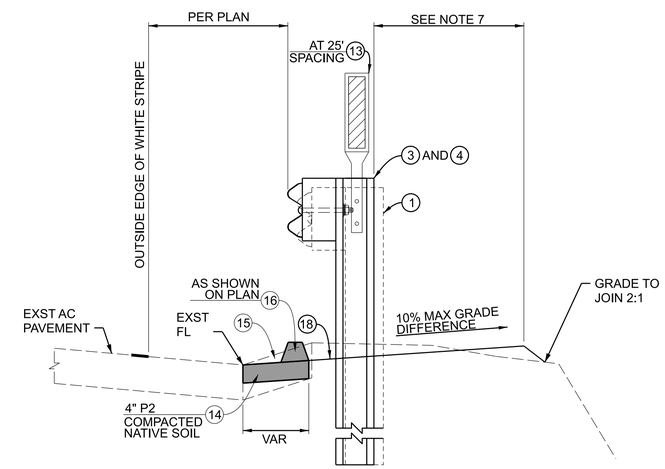

SECTION D
NOT TO SCALE

STANDARD PLANS

STATE OF CALIFORNIA DEPARTMENT OF TRANSPORTATION STANDARD PLANS (2024 EDITION)

A77L2	MIDWEST GUARDRAIL SYSTEM STANDARD RAILING SECTION
A77L4	MIDWEST GUARDRAIL SYSTEM TRANSITION TO METAL BEAM GUARDRAIL
A77N3	MIDWEST GUARDRAIL SYSTEM TYPICAL LINE POST EMBEDMENT AND HINGE POINT OFFSET DETAILS
A77N4	MIDWEST GUARDRAIL SYSTEM TYPICAL RAILING DELINEATION AND DIKE POSITIONING DETAILS
A77P2	MIDWEST GUARDRAIL SYSTEM TYPICAL LAYOUT FOR EMBANKMENTS
A77R1	MIDWESY GUARDRAIL SYSTEM TYPICAL LAYOUTS FOR FIXED OBJECTS BETWEEN SEPARATE ROADBEDS
A77S1	MIDWEST GUARDRAIL SYSTEM END ANCHOR ASSEMBLY (TYPE SFT-M)
A79A1	TRANSITION RAILING (TYPE AGT)
A87B	HOT MIX ASPHALT DIKES
1 A77N5	MINOR CONCRETE VEGETATION CONTROL GUARDRAIL SYSTEM
A77N5A	MINOR CONCRETE VEGETATION CONTROL GUARDRAIL SYSTEM NARROW VEGETATION CONTROL INSTALLATION
A77N6	MINOR CONCRETE VEGETATION CONTROL GUARDRAIL SYSTEM FOR TERMINAL SYSTEM END TREATMENTS
A77N7	MINOR CONCRETE VEGETATION CONTROL GUARDRAIL SYSTEM AT STRUCTURE APPROACH
A77N8	MINOR CONCRETE VEGETATION CONTROL GUARDRAIL SYSTEM AT FIXED OBJECT
A77N9	MINOR CONCRETE VEGETATION CONTROL GUARDRAIL SYSTEM AT FIXED OBJECT
A77N10	MINOR CONCRETE VEGETATION CONTROL GUARDRAIL SYSTEM AT FIXED OBJECT
A77N11	MINOR CONCRETE VEGETATION CONTROL GUARDRAIL SYSTEM MISCELLANEOUS DETAILS

GUARDRAIL NOTES

1. ALL STD GUARDRAIL INSTALLATION SHALL BE STEEL POSTS WITH NOTCHED PLASTIC BLOCKS.
2. ALL GUARDRAIL LENGTH AND LOCATION ARE MEASURED ALONG THE FACE OF THE RAILING, UNLESS OTHERWISE SHOWN ON THE PLANS AND DETAILS OR AS DIRECTED BY THE ENGINEER.
3. EACH TERMINAL SYSTEM INSTALLED MUST BE IDENTIFIED BY PAINTING THE TYPE OF THE TERMINAL SYSTEM IN NEAT BLACK LETTERS AND FIGURES 2 INCHES HIGH ON THE BACKSIDE OF THE RAIL ELEMENT BETWEEN SYSTEM POST NUMBERS 4 AND 5.
4. FOR INSTALLATION OF TERMINAL SYSTEMS, BLACK AND YELLOW RETROREFLECTIVE STRIPED SHEETING SHALL BE ADHERED TO THE APPROACH END (S) OF THE GUARDRAIL. THE STRIPES SHALL BE SLOPED DOWN AT AN ANGLE OF 45 DEGREES TOWARDS THE SIDE OF THE ROADWAY ON WHICH TRAFFIC IS TO PASS THE OBSTRUCTION BEING PROTECTED. THE SHEETING SHALL BE CONSISTENT WITH THE DESIGN PATTERN, COLORS, AND DIRECTION OF A TYPE "P(CA)" OBJECT MARKER PER CALIFORNIA MANUAL OF UNIFORM TRAFFIC CONTROL DEVICES (MUTCD) 2014 EDITION, SECTION 2C.65.
5. THE PROPOSED TERMINAL SYSTEM SHALL BE INSTALLED IN A STRAIGHT FLARE OVER THE ENTIRE LENGTH AND SHOULD NOT BE INSTALLED ON A PARABOLIC CURVE.
6. IN-LINE TERMINAL SYSTEMS MUST USE STEEL POSTS AND PLASTIC BLOCKS, AND INSTALLED PER MANUFACTURER'S RECOMMENDATIONS.
7. WHEN ADJACENT TO HINGE, WHERE THE DISTANCE BETWEEN BACK OF POST AND HINGE POINT IS LESS THAN 30" USE LONG POSTS PER CALTRANS STD PLAN A77N3 'NARROW ROADWAY INSTALLATION'.
8. (1) CONSTRUCT MINOR CONCRETE VEGETATION CONTROL AT ALL LOCATIONS PER CALTRANS STANDARD PLANS A77N5 THROUGH A77N11 EXCEPT WHERE MINOR CONCRETE & BLOCK-OUT MATERIAL ARE ALREADY SHOWN ON PLAN.

NOTE:

⇨ : INDICATES DIRECTION OF TRAFFIC

AC PAVEMENT CLASS AND GRADE LEGEND

P1 C2-PG 64-10 B-PG 64-10	P3 B-PG 64-10
P2 C2-PG 64-10	P4 D2-PG 64-10

DATE	MARK	DESCRIPTION
11/3/2025	1	ADDED MINOR CONCRETE VEGETATION CONTROL

REVISIONS

REGISTERED PROFESSIONAL ENGINEER BASRAR M. SUBEH C 91667 CIVIL STATE OF CALIFORNIA
PROJECT ENGINEER 7/31/2025 DATE

LOS ANGELES COUNTY PUBLIC WORKS

GUARDRAIL REPLACEMENT

VARIOUS LOCATIONS RD336 OFF-SYSTEM (EM2501)
SADDLE PEAK ROAD & TUNA CANYON ROAD
PROJECT ID NO. RDC0016661
NOTES, REFERENCES, TYPICAL SECTIONS

DWG PH086888 | SHEET 2 OF 5

PLAN G

DATE 7/31/25 | REVIEWED BY | CADD PROJECT FILE NAME Saddle Peak Rd.dgn | CHECKER J. MELGAR | DESIGNER B. SUBEH | DRAFTER L. KESHISHIAN

DATE: 7/31/2025 TIME: 3:39:34 PM FILE: pw://pwedmsprod01.dpw.co.la.ca.us:PW_INT2/Documents/DEPARTMENT PROJECTS (PIW)/DES/DES0003842 - 2025 Palisades File - Guardrail Repair/DES Guardrail/Support/CAD/LK/Saddle Peak Rd

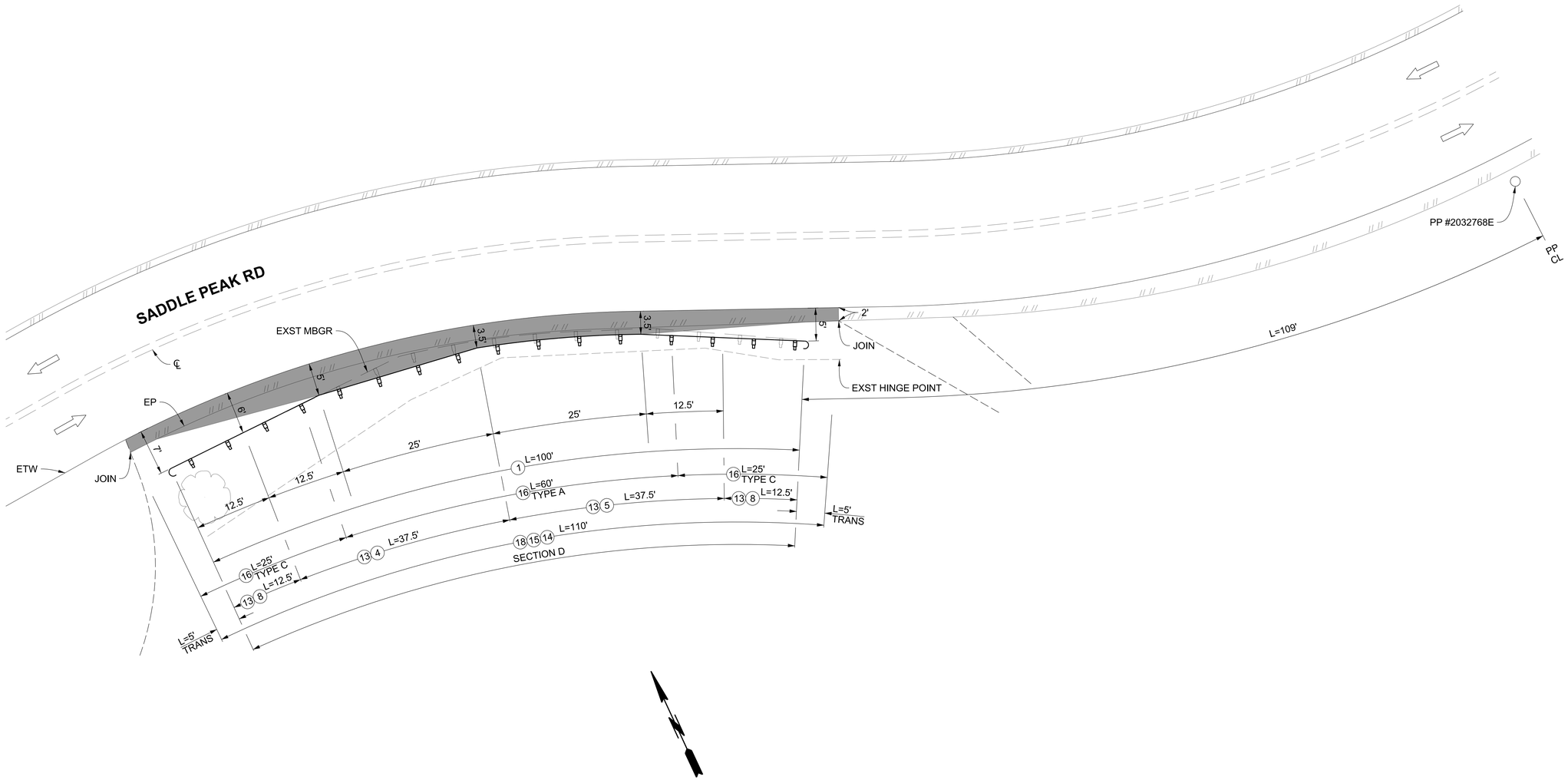

PLAN
SADDLE PEAK RD MM 1.28
NO SCALE

DATE	MARK	DESCRIPTION

REVISIONS

REGISTERED PROFESSIONAL ENGINEER
BASHAR M. SUBEH
C 91667
CIVIL
STATE OF CALIFORNIA

7/31/2025
PROJECT ENGINEER DATE

LOS ANGELES COUNTY PUBLIC WORKS

GUARDRAIL REPLACEMENT

VARIOUS LOCATIONS RD336 OFF-SYSTEM (EM2501)
SADDLE PEAK RD - MM 1.28
PROJECT ID NO. RDC0016661
PLAN

DWG	PH086888	PCA	SHEET 3 OF 5

PLAN G

DRAFTER	DESIGNER	CHECKER	CADD PROJECT FILE NAME	REVIEWED BY	DATE
L. KESHISHIAN	B. SUBEH	J. MELGAR	Saddle Peak Rd.dgn		7/31/25

DATE: 7/31/2025 TIME: 3:40:54 PM FILE: pw://pwedmsprod01.dpw.co.la.ca.us:PW_INT2/Documents/DEPARTMENT PROJECTS (PIW)/DES/DES0003842 - 2025 Palisades File - Guardrail Repair/DES Guardrail/Support/CAD/LK/Saddle Peak Rd

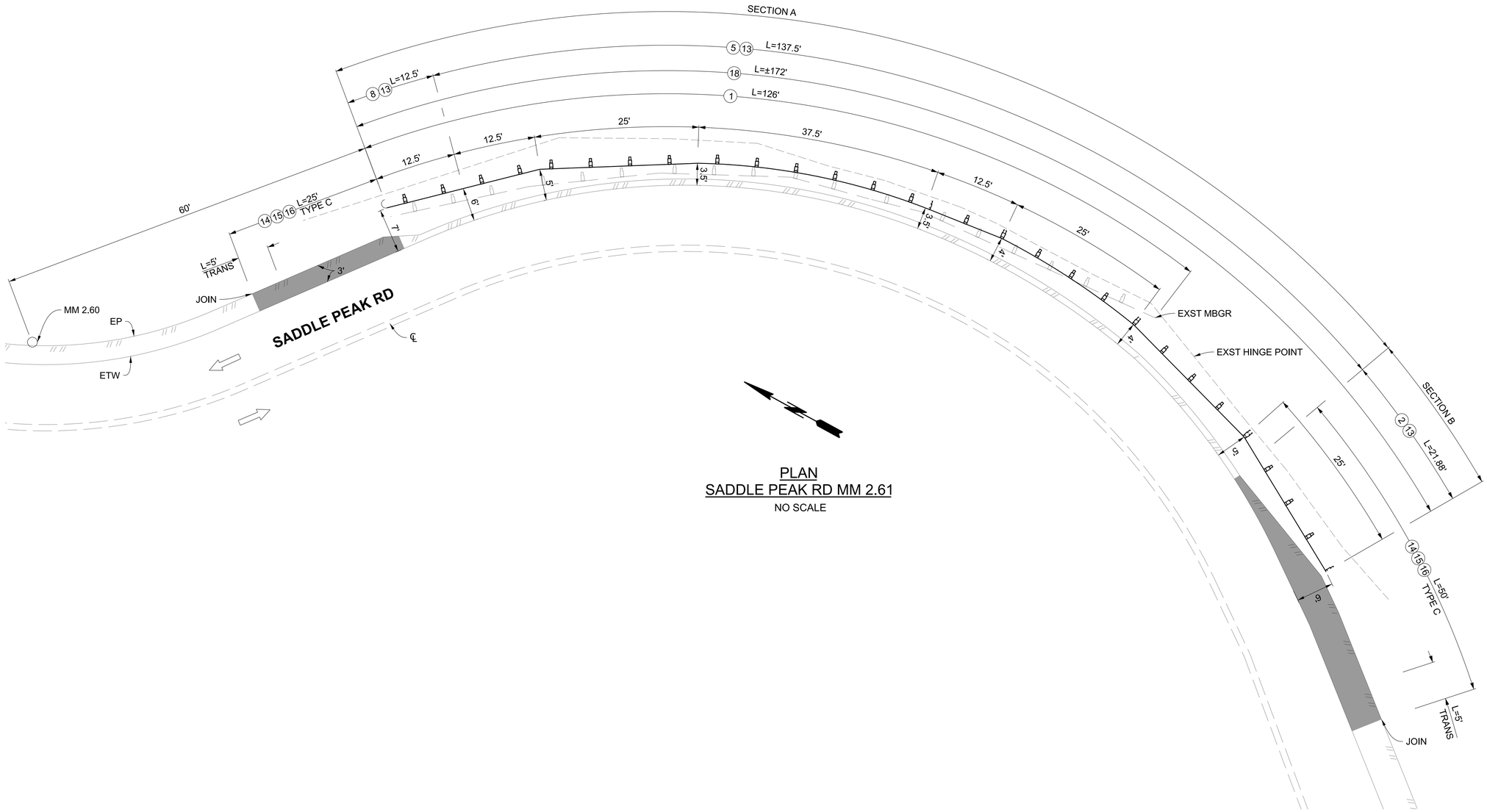

PLAN
SADDLE PEAK RD MM 2.61
NO SCALE

DRAFTER	DESIGNER	CHECKER	CADD PROJECT FILE NAME	REVIEWED BY	DATE
L. KESHISHIAN	B. SUBEH	J. MELGAR	Saddle Peak Rd.dgn		7/31/25

DATE	MARK	DESCRIPTION

REVISIONS

REGISTERED PROFESSIONAL ENGINEER BASHAR M. SUBEH C 91667 CIVIL STATE OF CALIFORNIA

PROJECT ENGINEER 7/31/2025 DATE

LOS ANGELES COUNTY PUBLIC WORKS

GUARDRAIL REPLACEMENT

VARIOUS LOCATIONS RD336 OFF-SYSTEM (EM2501)
SADDLE PEAK RD - MM 2.61
PROJECT ID NO. RDC0016661
PLAN

DWG	PH086888	PCA	SHEET 4 OF 5

PLAN G

DATE: 7/31/2025 TIME: 3:41:24 PM FILE: pw://pwedmsprod01.dpw.co.la.ca.us:PW_INT2/Documents/DEPARTMENT PROJECTS (PIW)/DES/DES0003842 - 2025 Palisades File - Guardrail Repair/DES Guardrail/Support/CAD/LK/Saddle Peak Rd

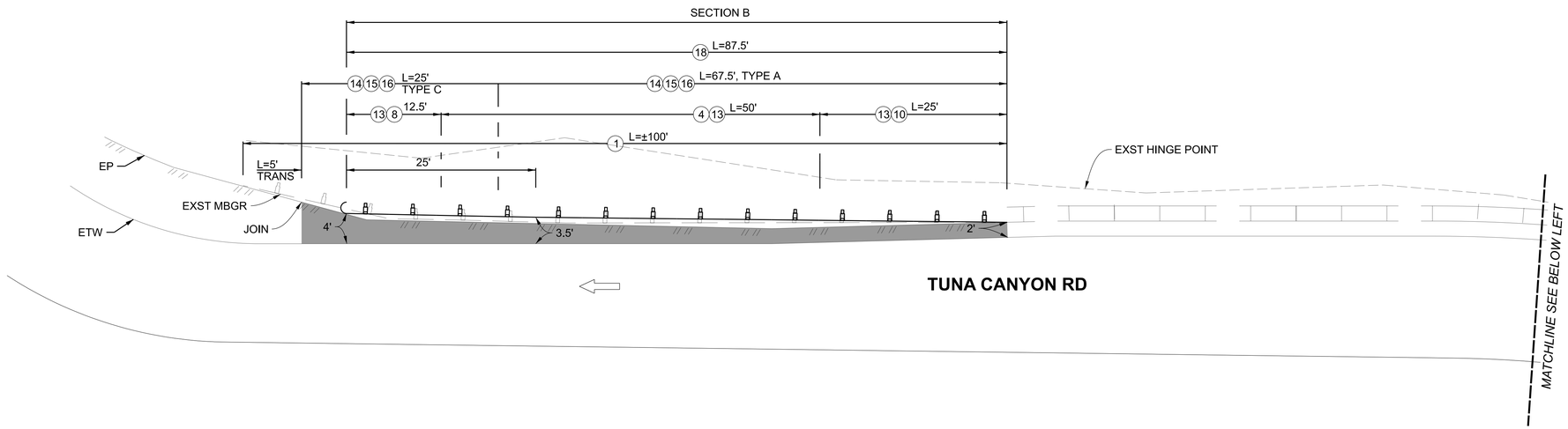

PLAN
TUNA CANYON RD MM 4.98
NO SCALE

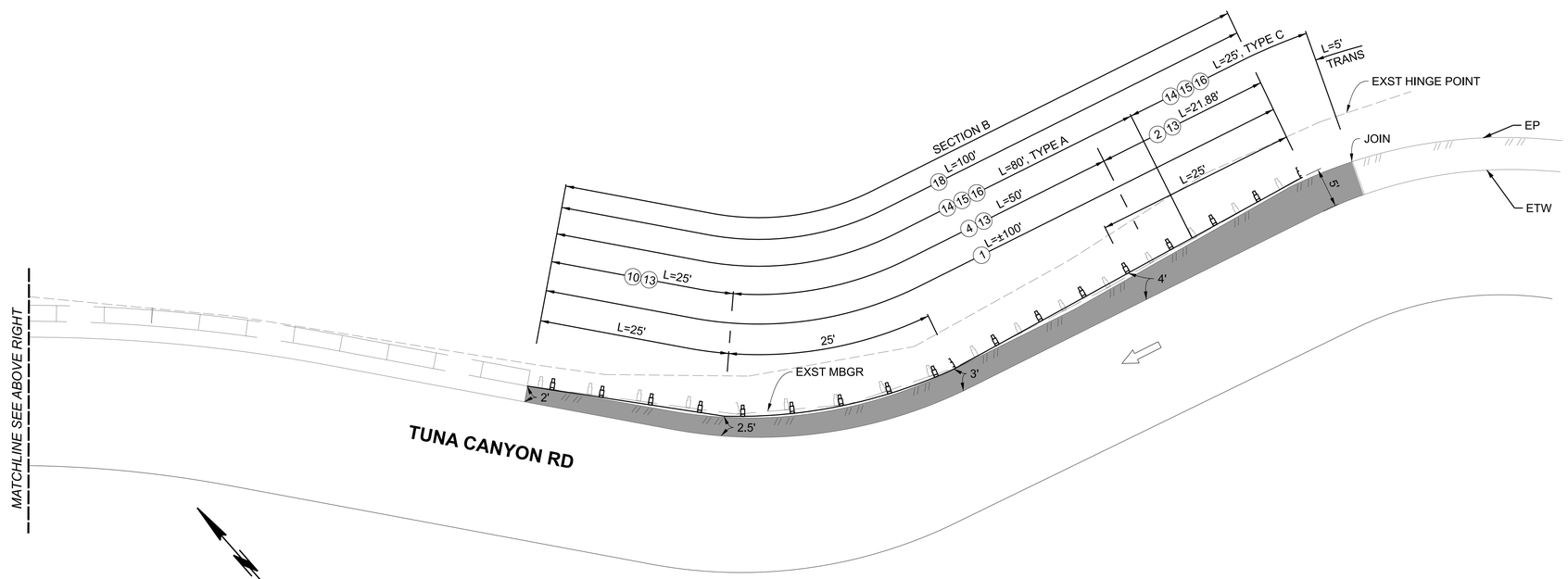

PLAN
TUNA CANYON RD MM 4.97
NO SCALE

DATE	MARK	DESCRIPTION

REVISIONS

REGISTERED PROFESSIONAL ENGINEER
BASHAR M. SUBEH
C 91667
CIVIL
STATE OF CALIFORNIA

PROJECT ENGINEER 7/31/2025 DATE

LOS ANGELES COUNTY PUBLIC WORKS

GUARDRAIL REPLACEMENT

VARIOUS LOCATIONS RD336 OFF-SYSTEM (EM2501)
TUNA CYN RD - MM 4.97 & 4.98
PROJECT ID NO. RDC0016661
PLAN

DWG	PH086888	PCA	SHEET 5 OF 5

PLAN G

DRAFTER	DESIGNER	CHECKER	CADD PROJECT FILE NAME	REVIEWED BY	DATE
L. KESHISHIAN	B. SUBEH	J. MELGAR	Saddle Peak Rd.dgn		7/31/25

DATE: 7/31/2025 TIME: 3:41:47 PM FILE: pw://pwedmsprod01.dpw.co.la.ca.us:PW_INT2/Documents/DEPARTMENT PROJECTS (PIW)/DES/DES0003842 - 2025 Palisades File - Guardrail Repair/DES Guardrail/Support/CAD/LK/Saddle Peak Rd